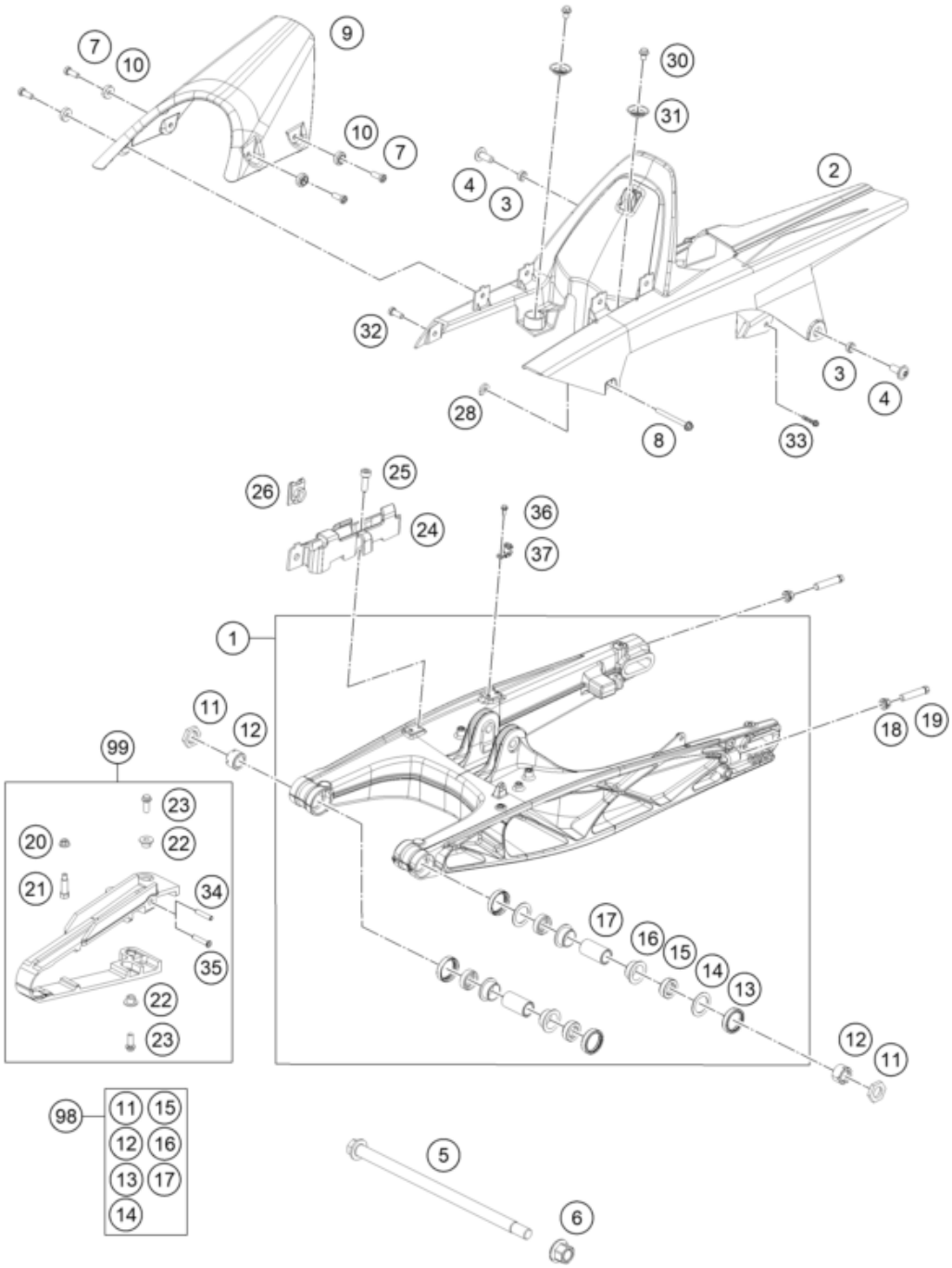

Pos	Part Number	Description	Additional Text	Quantity
1	90504030044	SWING ARM CPL.		1.00
2	9050406000033	CHAIN COVER BLACK		1.00
3	90504060050	SLEEVE FOR CHAIN COVER		2.00
4	90508008001	AH SCREW M8X20		2.00
5	90104037000	Shaft swing arm L=299mm		1.00
6	90104038000	FLANGED NUT M14X1.5		1.00
7	90808043001	BOLT SOCKET M6X1XL		4.00
8	J025050504	BOLT FLANGED M5X0.8XL		1.00
9	90504050100	REAR FENDER HD		1.00
10	90508046000	SPECIAL WASHER		4.00
11	90104042000	hex thrust washer		2.00
12	90104046000	swingarm adjusting ring		2.00
13	90104034001	OIL SEAL RING 25X32X7		4.00

14	90104036000	Thrust washer 22.2x31.7x1		2.00
15	90104034000	cup for radial shaft seal		4.00
16	90104031000	Igus plain bearing		4.00
17	90104032000	sleeve bushing 15.1x20x38		2.00
18	90104010002	flanged hex nut M10x1.25 WS13		2.00
19	90104040000	BOLT HEX M10X1.25X50 WS10		2.00
20	90204060001	HH COLLAR NUT		1.00
21	90104040100	screw M5x0.8x30		1.00
22	90604062000	chain slider bushing		2.00
23	J025060169	HH COLLAR SCREW M6X16 SW8		2.00
24	90513147000	BRAKE HOSE GUIDE		1.00
25	J912050151	AH SCREW M5X14 BLACK		1.00
26	90103097000	clip nut		1.00
28	90504067000	WASHER CHAIN SLIDING GUARD		1.00
30	J025060083	HH COLLAR SCREW M6X8 SW8		2.00
31	90104067000	BUCKET		2.00
32	90808043000	SPECIAL SCREW M6X1X16		1.00
33	90504060001	SCREW SELF TAP D=6		1.00
34	90104070020	SLEEVE CHAIN GUARD		0.00
35	90904070020	SLEEVE CHAIN GUARD		0.00
36	J011050133	HH COLLAR SCREW M5X13 SW8		1.00
37	90113047000	brake hose guide		1.00
98	90104230010	SWINGARM REP. KIT 11-17		0.00
99	90104066310	CHAIN GUARD KIT 125/200		0.00