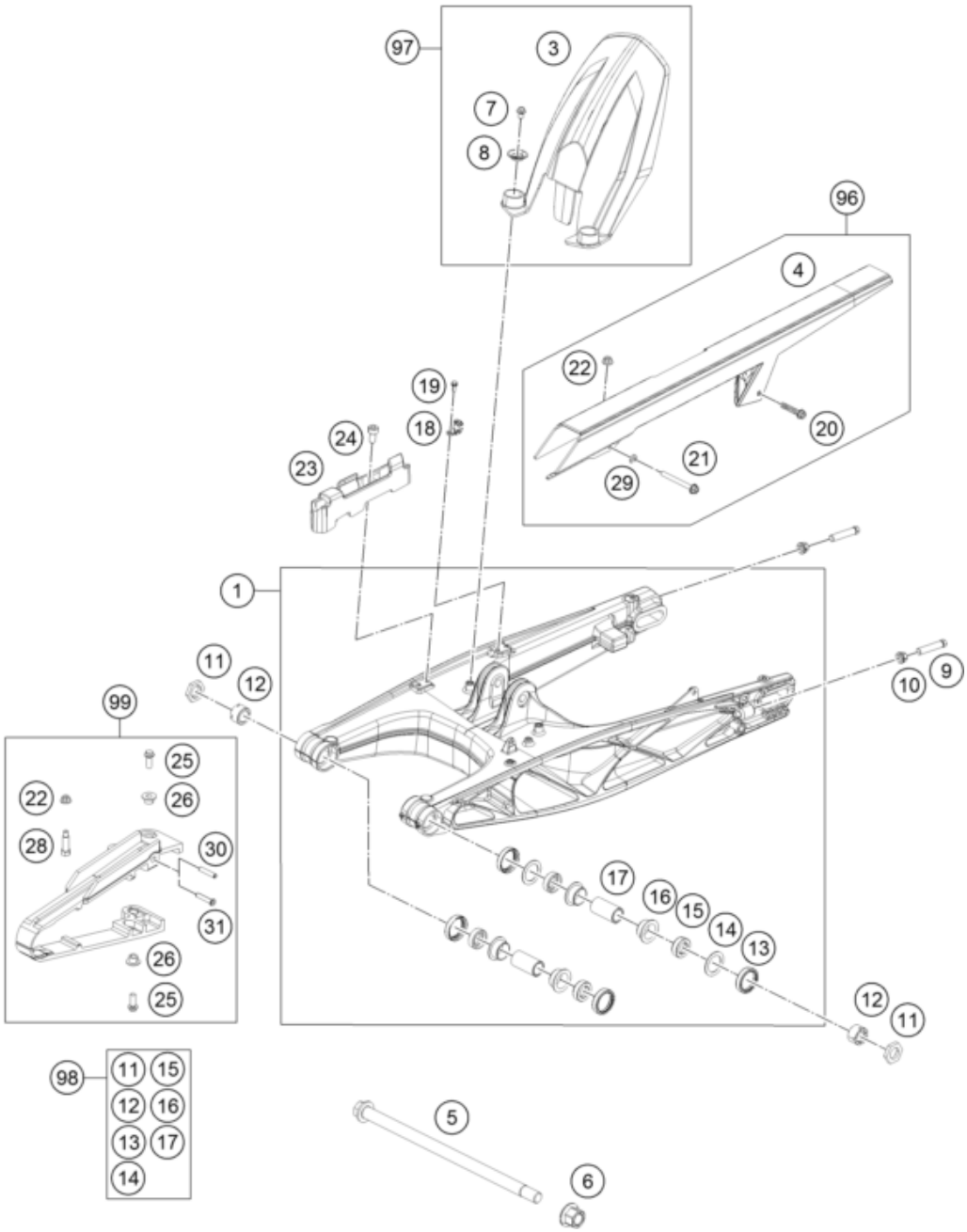

Pos	Part Number	Description	Additional Text	Quantity
1	90504030044	SWING ARM CPL.		1.00
3	90104050000	SPLASH PROTECTOR		1.00
4	90104060000	CHAIN GUARD CPL.		1.00
5	90104037000	Shaft swing arm L=299mm		1.00
6	90104038000	FLANGED NUT M14X1.5		1.00
7	J025060083	HH COLLAR SCREW M6X8 SW8		2.00
8	90104067000	BUCKET		2.00
9	90104040000	BOLT HEX M10X1.25X50 WS10		2.00
10	90104010002	flanged hex nut M10x1.25 WS13		2.00
11	90104042000	hex thrust washer		2.00
12	90104046000	swingarm adjusting ring		2.00
13	90104034001	OIL SEAL RING 25X32X7		4.00
14	90104036000	Thrust washer 22.2x31.7x1		2.00
15	90104034000	cup for radial shaft seal		4.00

16	90104031000	Igus plain bearing		4.00
17	90104032000	sleeve bushing 15.1x20x38		2.00
18	90113047000	brake hose guide		1.00
19	J011050133	HH COLLAR SCREW M5X13 SW8		1.00
20	0017060303	SPECIAL SCREW T60 6X30 WS=6		1.00
21	J025050503	HH COLLAR SCREW M5X50 SW8		1.00
22	90204060001	HH COLLAR NUT		1.00
23	90113147000	brake hose guide		1.00
24	J912050101	AH SCREW M5X10		1.00
25	J025060169	HH COLLAR SCREW M6X16 SW8		2.00
26	90604062000	chain slider bushing		2.00
28	90104040100	screw M5x0.8x30		1.00
29	90504067000	WASHER CHAIN SLIDING GUARD		1.00
30	90104070020	SLEEVE CHAIN GUARD		0.00
31	90904070020	SLEEVE CHAIN GUARD		0.00
96	90104060110	CHAIN PROTECTION KIT DUKE		0.00
97	90106010010	SPLASH GUARD KIT 390 DUKE		0.00
98	90104230010	SWINGARM REP. KIT 11-17		0.00
99	90104066210	CHAIN GUARD KIT 250/390		0.00