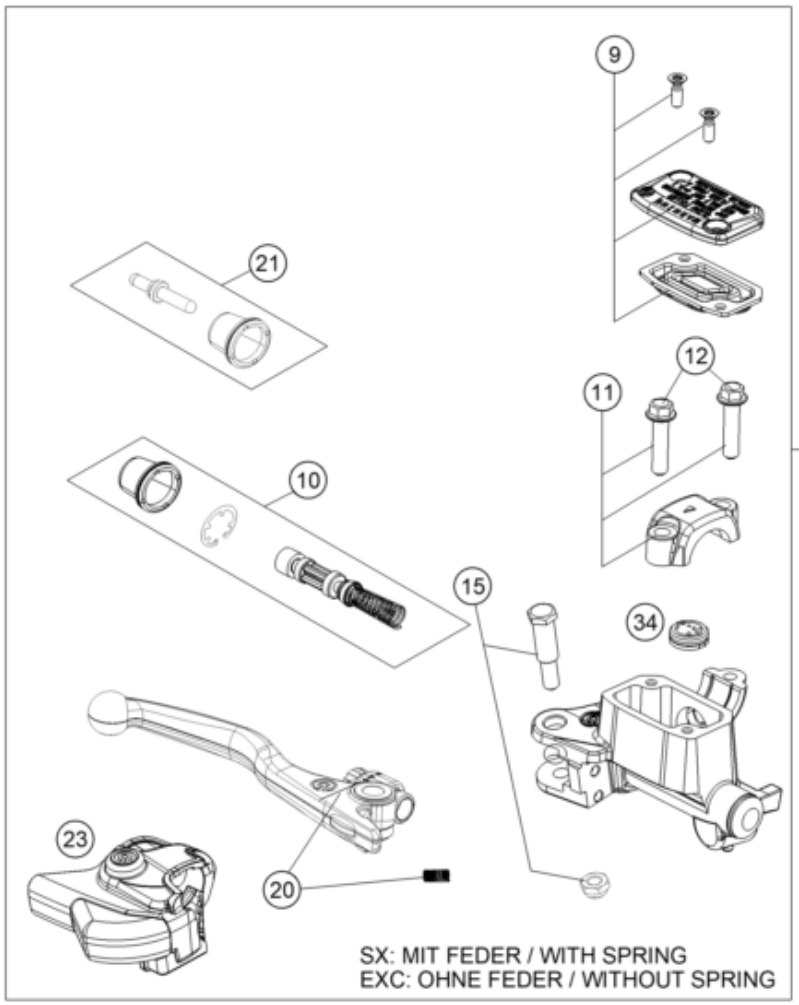



Pos	Part Number	Description	Additional Text	Quantity
1	77713001044	HAND BRAKE CYLIND. CPL. SX 201		1.00
9	77713003000	HAND BRAKE CYL. COVER		1.00
10	77713008000	REPAIR KIT PISTON SX 2014		1.00
11	54802005100	CLAMP CPL. 06		1.00
12	0025060256	HH collar screw M6x25 TX30		2.00
15	77713006000	LEVER SCREW		1.00
20	77713002000	Hand brake lever + spring SX 1	SX WITH SPRING, EXC WITHOUT SP	1.00
21	77713007000	PUSH ROD CPL. SX 2014		1.00
23	77713004000	Protection cap, hand brake cyl		1.00
30	59013010000	Brakeho. Front 1235mm 2000	125-380 SX	1.00
31	54813020100	banjo bolt M10x1x19 black	SX, EXC USA	1.00
32	0603100141	sealing ring DIN 7603 10x14x1	ONLY FOR LC4 ADVENTURE	2.00

34	54802051000	VALVE		1.00
80	00062030000	Brake fluid DOT5.1 0,25L		1.00