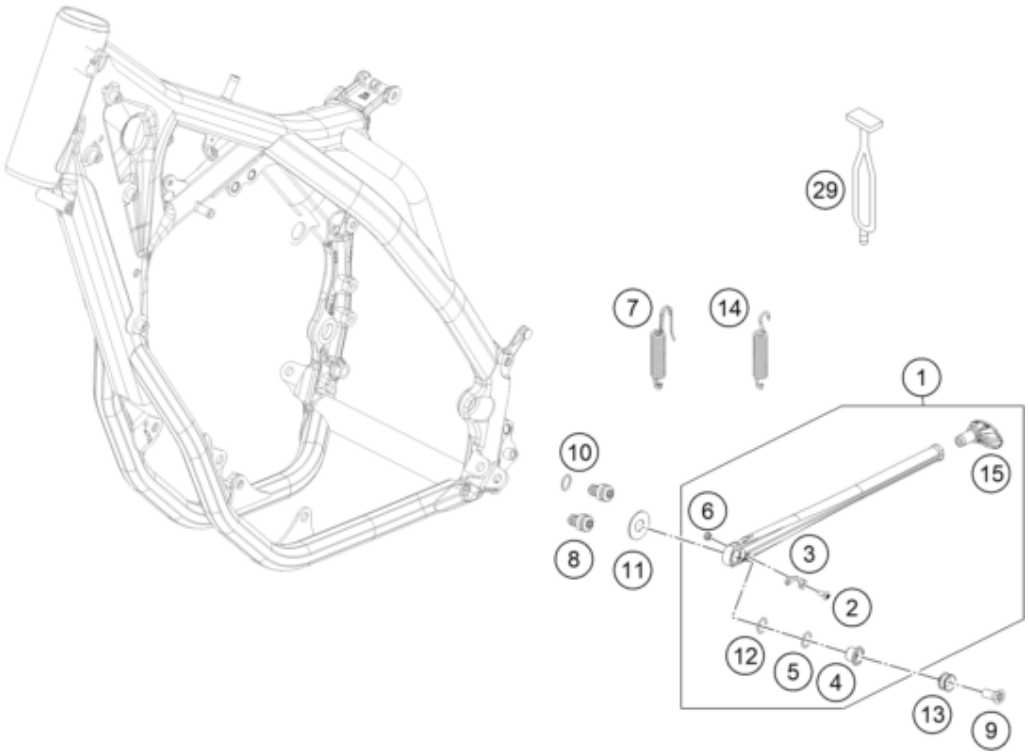

Pos	Part Number	Description	Additional Text	Quantity
1	78003023044	SIDE STAND CPL. 08		1.00
2	58605083014	Oval head screw M5x14 TX25	only for "R"	1.00
3	78003023090	SPRING BRACKET F. SIDE ST. 08		1.00
4	78003023080	SIDE STAND BUSHING EXC USA 08		1.00
5	0770180020	o-ring 18.00x2.00 NBR70		1.00
6	78003023070	SPACER BUSH. SPRING BRACKET		1.00
7	81203024000	SIDE STAND SPRING EYE MOVEABLE	ONLY FOR EXC	1.00
8	78003023182	SIDE STAND STOP SCREW M10X12		2.00
9	0019080266S	COUNTER-SUNK SCREW ISA45 M8X26	ONLY FOR 78003023081	1.00
9	0019080206S	FLAT HEAD SCREW M. ISA45 M8X20		1.00
10	0770120020	O-RING 12,00X2,00 NBR 70		1.00
11	78003023083	WASHER F. SIDE STAND 12,2X29,5		1.00
12	0770125015	O-RING 12,5X1,5 NBR		1.00
13	78003023081	Side stand bushing	ONLY FOR 78003023081	1.00
14	78003024100	SIDE STAND SPRING 08	ONLY FOR XC	1.00
15	78003023155	STAND BASE		1.00
29	50303018000	RUBBER L=145MM		1.00