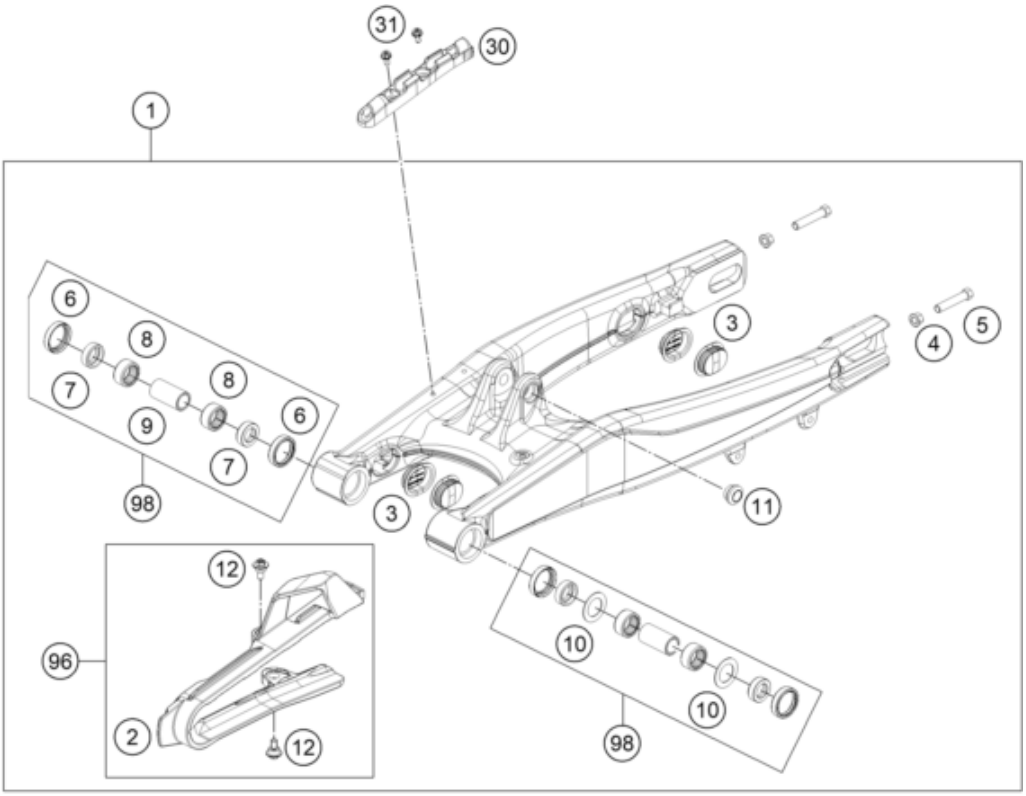

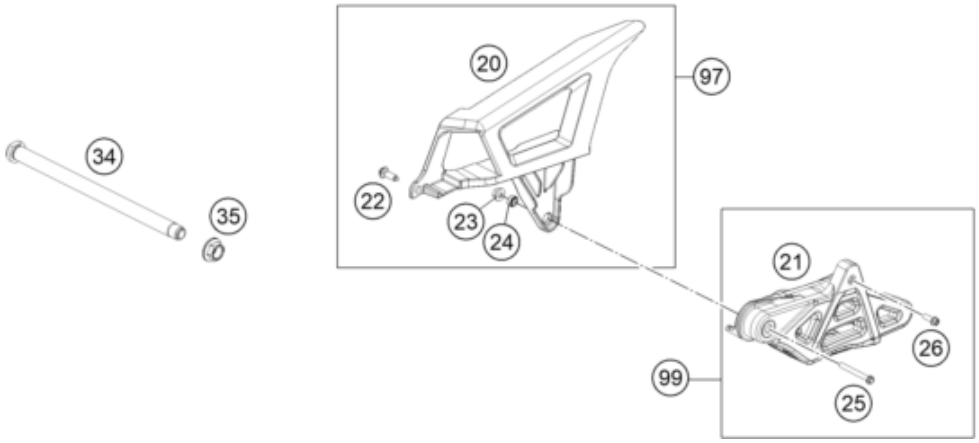

Pos	Part Number	Description	Additional Text	Quantity
1	70004030044	SWINGARM CPL.		1.00
2	70004066000	CHAIN GUIDE GUARD		1.00
3	77204041000	Locking cap swingarm		4.00
4	46030045000	flanged nut M8 WS10		2.00
5	50203030090	HH SCREW M8X40 WS=10		2.00
6	0760253270	radial shaft seal 25x32x7		4.00
7	54603090000	BUCKET F.SHAFTSEALRING 15X25X9		4.00
8	59004031000	NEEDLE BUSH HK2012V		4.00
9	50203081700	BUSHING SLEEVE 15X20X38,75		2.00
10	59033080000	Shim 20x31.9x1		2.00
11	50180105	Threaded bush M12 d20		1.00
12	83008100015	Special screw M6x15x5.5		2.00
20	70004060000	CHAIN GUARD		1.00
21	78104070100	Chain cuide EXC		1.00
22	0017060205	SCREW FOR PLASTIC K60X20 SW6		1.00

23	56509064100	Self locking nut M6 - 10		1.00
24	54603055051	PRESS IN NUT M6 STEEL ZINC		1.00
25	0025060506	HH collar screw M6x50 TX30		1.00
26	0025060206	HH collar screw M6x20 TX30		1.00
30	70013047000	BRAKE HOSE GUIDE		1.00
31	0009050106	EJOT SPIRAL SCREW SF M5X10-K		2.00
34	70004037000	SWING ARM BOLT L=239 '12		1.00
35	77204087000	hex nut M14x1.5 WS17		1.00
96	70004066010	CHAIN GUARD KIT FREERIDE		0.00
97	70004060110	CHAIN PROTECTION KIT FREERIDE		0.00
98	47004230010	SWINGARM REP. KIT 105/85 SX		0.00
99	77304070310	Chain guide kit		0.00