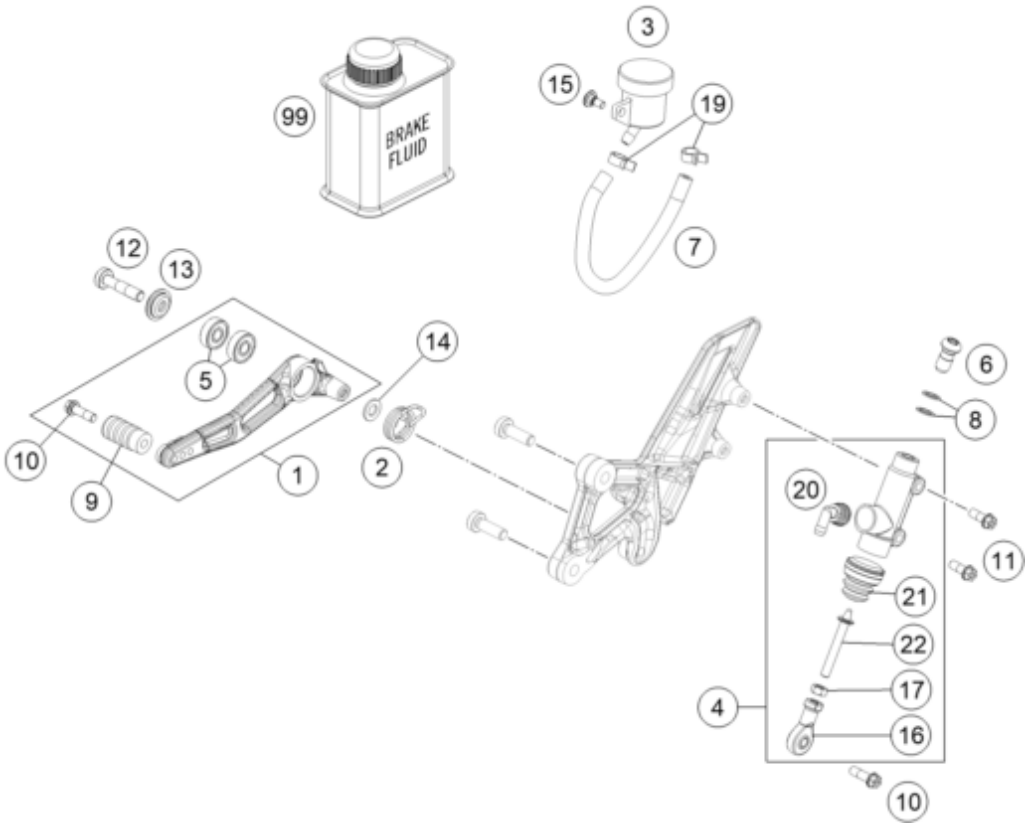

Pos	Part Number	Description	Additional Text	Quantity
1	6131305004433S	FOOT BRAKE LEVER CPL.		1.00
2	61313052000	SPRING		1.00
3	61013069000	reservoir, rear cpl.		1.00
4	6031306000030	REAR BRAKE CONTROL		1.00
5	0625006087	Grooved ball bearing 608 2RS C		2.00
6	62113020100	banjo bolt M10x1x19.5		1.00
7	69013069001	HOSE FOR RESERVOIR 6X1,5	1X 60MM, 1X 195MM	1.00
8	0603100141	sealing ring DIN 7603 10x14x1	ONLY FOR LC4 ADVENTURE	2.00
9	58303060051	Brake lover pedal Duke 94		1.00
10	0025060206S	HH collar screw M6x20 TX30		2.00
11	0025060166S	HH collar screw M6x16 TX30 SL		2.00
12	0035080356S	SCREW M8X35 ISA45 SS		1.00
13	61334041000	SPECIAL WASHER D=23X7,2MM		1.00
14	0125080003	washer DIN 125 A -8.4		1.00
15	69013099050	Screw for expansion tank	ONLY AUS	1.00
16	54603069000	SWIVEL HEAD M6 FOOT BRAKE LEV.		1.00
17	0934060003	Hex. nut DIN 934 M6		1.00
19	58007017000	YDNAC-clamp 10101 (10.4MM)	300 TPI Erzbergrodeo	2.00
20	54513155000	ANGLE PIECE		1.00
21	54513151000	RUBBER SLEEVE		1.00
22	60313056044	PUSH ROD CPL.		1.00
99	00062030000	Brake fluid DOT5.1 0,25L		1.00