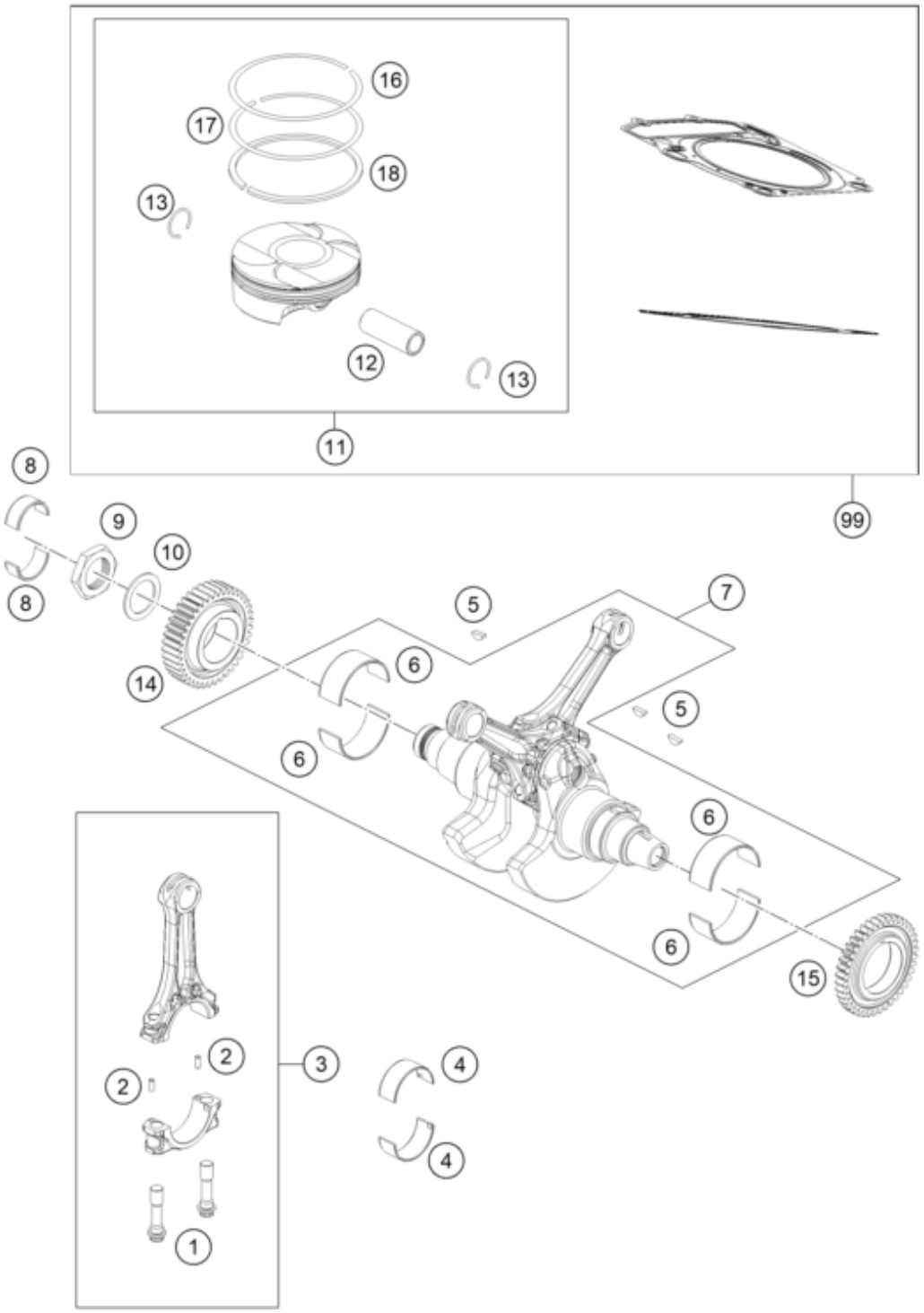

Pos	Part Number	Description	Additional Text	Quantity
1	61230015100	CONNECTING ROD SCREW MJ10X1		4.00
2	0402040980	Needle roll.DIN5402 NRB 4X9.8		4.00
3	69130013000	CONNECTING ROD CPL. 122 MM		2.00
4	612300151101	SPLIT BEAR. BUSH RED		0.00
4	612300151103	SPLIT BEAR. BUSH YELLOW		0.00
4	612300151102	SPLIT BEAR. BUSH BLUE		0.00
5	0888040050	woodruff key DIN 6888 4x5x13		3.00
6	612300820001	SPLIT BEAR. BUSH RED 08		0.00
6	612300820002	SPLIT BEAR. BUSH BLUE 08		0.00
6	612300820003	SPLIT BEAR. BUSH YELLOW 08		0.00

7	69330018100	CRANKSHAFT CPL.		1.00
8	60030026010	BUSHING BOWL 28X32X13 03		2.00
9	60032009050	HH-NUT M33X1,5 L/S WS46 03		1.00
10	60032009040	WASHER 33,2X46X2 03		1.00
11	69130007200 I	PISTON CPL. D=105 GR. I		0.00
11	69130007200 II	PISTON CPL. D=105 GR. II		0.00
12	61230033000	PISTON PIN D=20 08		2.00
13	77630074000	CIRCLIP		4.00
14	61230055000	PRIMARY GEAR		1.00
15	61230056000	DRIVE WHEEL BALANCER SHAFT 08		1.00
16*	69130030100	PISTON RING D105 2014		2.00
17*	69130031100	PISTON RING D105 2014		2.00
18	69130032100	OIL SCRAPER PISTON RING		2.00
99	69130007110 I	PISTONKIT GR. I RC8 13-14		0.00
99	69130007110 II	PISTONKIT GR. II RC8 13-14		0.00

* = New part