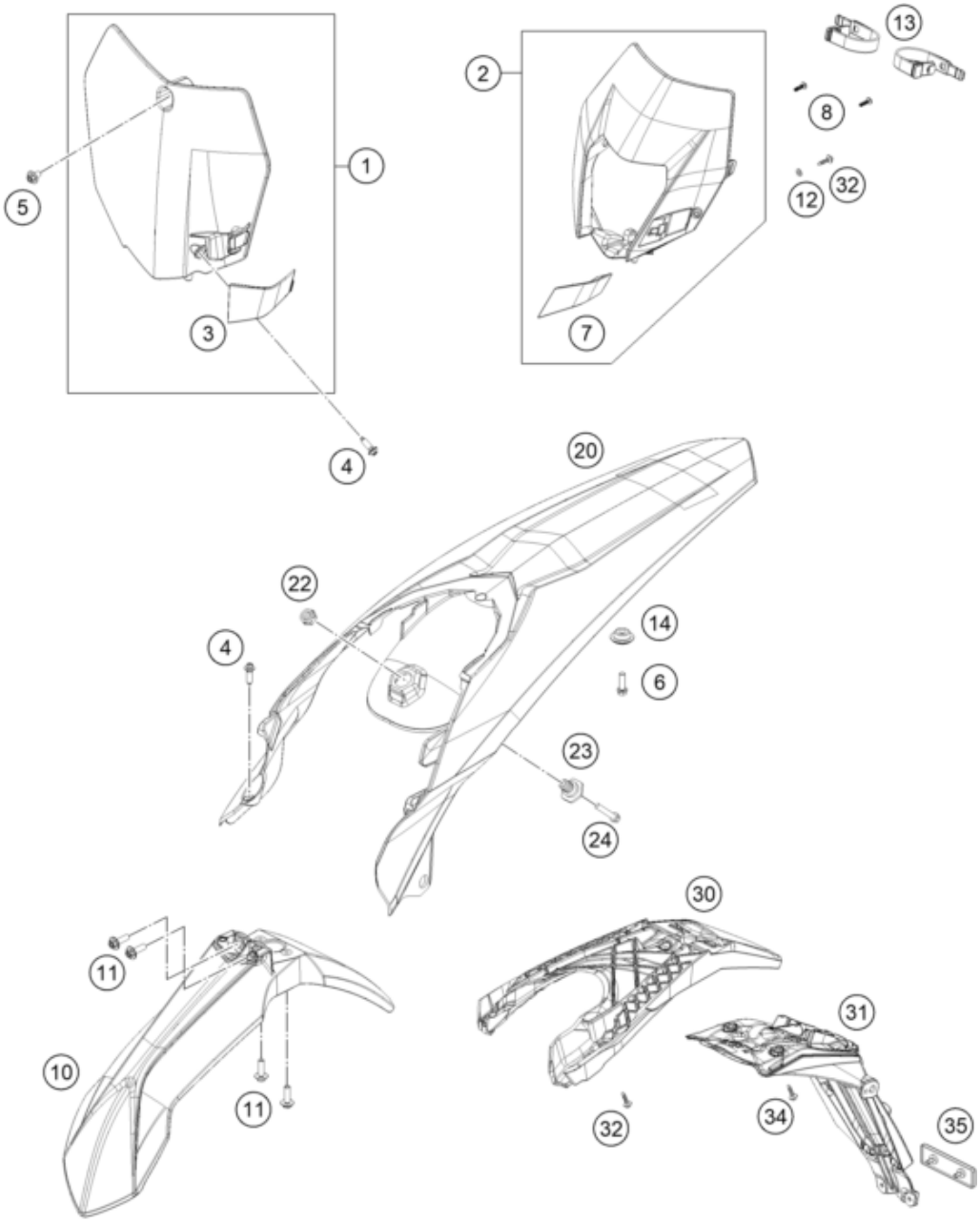

Pos	Part Number	Description	Additional Text	Quantity
1	7770800704428	START NUMBER PLATE WHITE SX 13		1.00
2	7810800100028	HEAD LIGHT MASK WHITE 2014		1.00
3	7770802200030	BRAKE HOSE GUIDE BLACK 13		1.00
4	0017060206	SCREW F. PLASTIC K60X20AL SW6		2.00
5	0024060106	HH COLLAR SCREW M6X10 TX30		1.00
6	0025060206	HH collar screw M6x20 TX30		2.00
7	7810802200028	BRAKE HOSE GUIDE WHITE		1.00
8	0081050181	SCREW FOR PLASTIC K50X18 T20	300 TPI Erzbergrodeo	3.00
10	7770801000028	FRONT FENDER WHITE		1.00
11	0025060166	HH collar screw M6x16 TX30		4.00
12	0125060003	WASHER DIN0125-A 6,4		1.00
13	78108003000	MASK RUBBER		2.00
14	77308013010	COLLAR BUSH. F.REAR FENDER 07		2.00
20	7810801300028	REAR FENDER WHITE		1.00
22	50314057050	COLLAR NUT M12X1/WS17 H=5MM		1.00

23	54807048000	BUSHING FOR SEAT FASTENING 03		1.00
24	0025060256	HH collar screw M6x25 TX30		1.00
30	78108016000	NUMBER PLATE CARRIER TOP		1.00
31	78108016050	NUMB.PLATE CARRIER BOTTOM		1.00
32	0017060205	SCREW FOR PLASTIC K60X20 SW6		3.00
34	0017060305	Special screw K60X30 WS=6		2.00
35	58412080000	REFLECTOR RED	EU+AUS	1.00