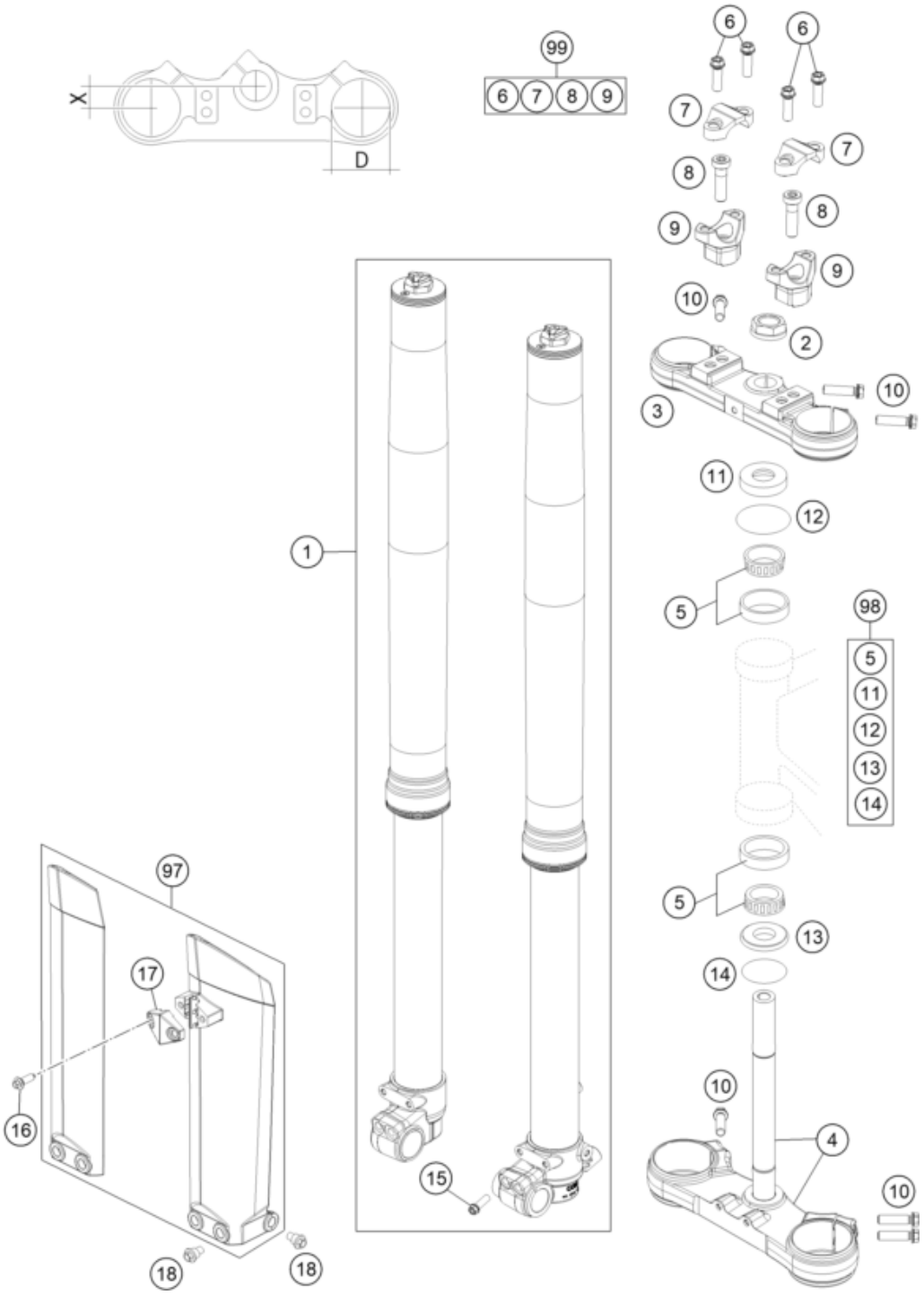

Pos	Part Number	Description	Additional Text	Quantity
1	05187M0501	FORK WP 85SX 2013		1.00
2	59030029000	HH NUT M20X1,5 WS=27 RIGHT	SX RACING	1.00
3	47101034114	TOP TRIPLE CLAMP		1.00
4	47101032114	BOTTOM TRIPLE CLAMP CPL.		1.00
5	49001081000	TAPERED ROLLER BEARING 32004X		2.00
6	0025080256	HH collar screw M8x25	A400C102Z106102	4.00
7	77201038000	HANDLEBAR CLAMP 28MM		2.00
8	0032100356S	AH-COLLAR SCREW M10X35 ISA45		2.00
9	59401039037	Handlebar mount D28mm-H37mm		2.00
10	0025080306	HH collar screw M8x30		6.00
11	49001086000	COVERING CAP		1.00

12	0770049025	O-RING 49,00X2,50 NBR		1.00
13	46001086000	PROTECTION RING 20,1X39X5		1.00
14	0770360030	O-RING 36,00X3,00 NBR		1.00
15	0025080206	HH collar screw M8x20	SELF-LOCKING	4.00
16	0017060206	SCREW F. PLASTIC K60X20AL SW6		2.00
17	7800108500028	CLAMP F. SPEED. CABLE D=6MM 08		1.00
18	59001092050	SPECIAL SCREW M6X12,5 WS=8		6.00
97	4710109400028	FORK PROTECTOR SET 85SX WHITE		1.00
98	00050000931	STEARING HEAD REP. KIT MINI		0.00
99	00050000921	HANDLEBAR SUPPORT KIT D28/H37		0.00