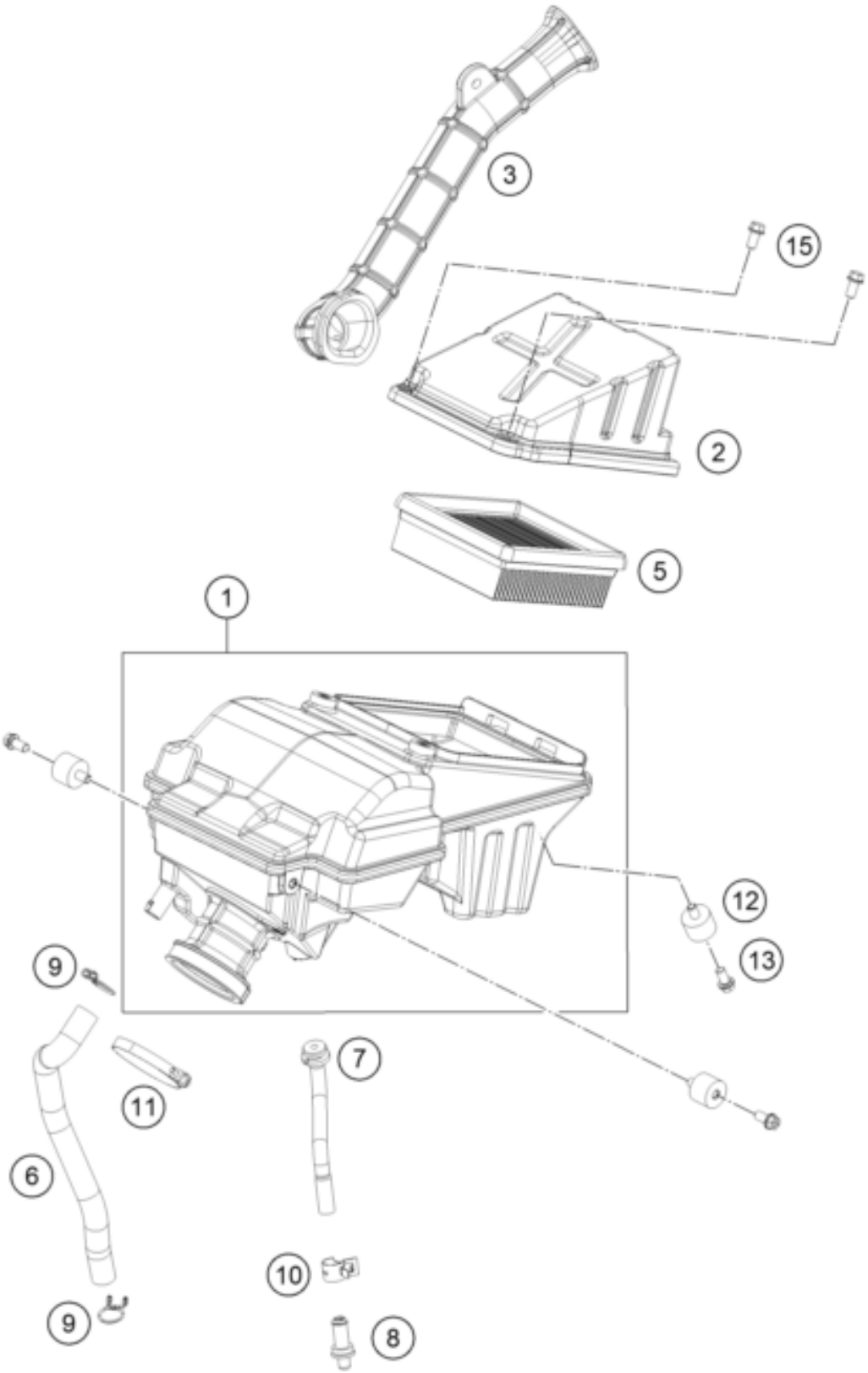

Pos	Part Number	Description	Additional Text	Quantity
1	90606001044	FILTER BOX CPL.		1.00
2	90106002000	AIRFILTER TOP PART CPL.		1.00
3	90106040000	AIR INTAKE		1.00
5	90106015000	AIRFILTER		1.00
6	90130087000	ENGINE BREATHER TUBE		1.00
7	90106000100	DRAINAGE HOSE		1.00
8	90106000001	PLUG DRAINAGE		1.00

9	90130087001	HOSE CLAMP		2.00
10	90106000004	HOSE CLAMP		2.00
11	90106027000	HOSE CLAMP		1.00
12	90135001001	silentbloc M6		3.00
13	J025060086	HH COLLAR SCREW M6X8 SW10		3.00
15	J025060123	HH COLLAR SCREW M6X12 SW8		2.00