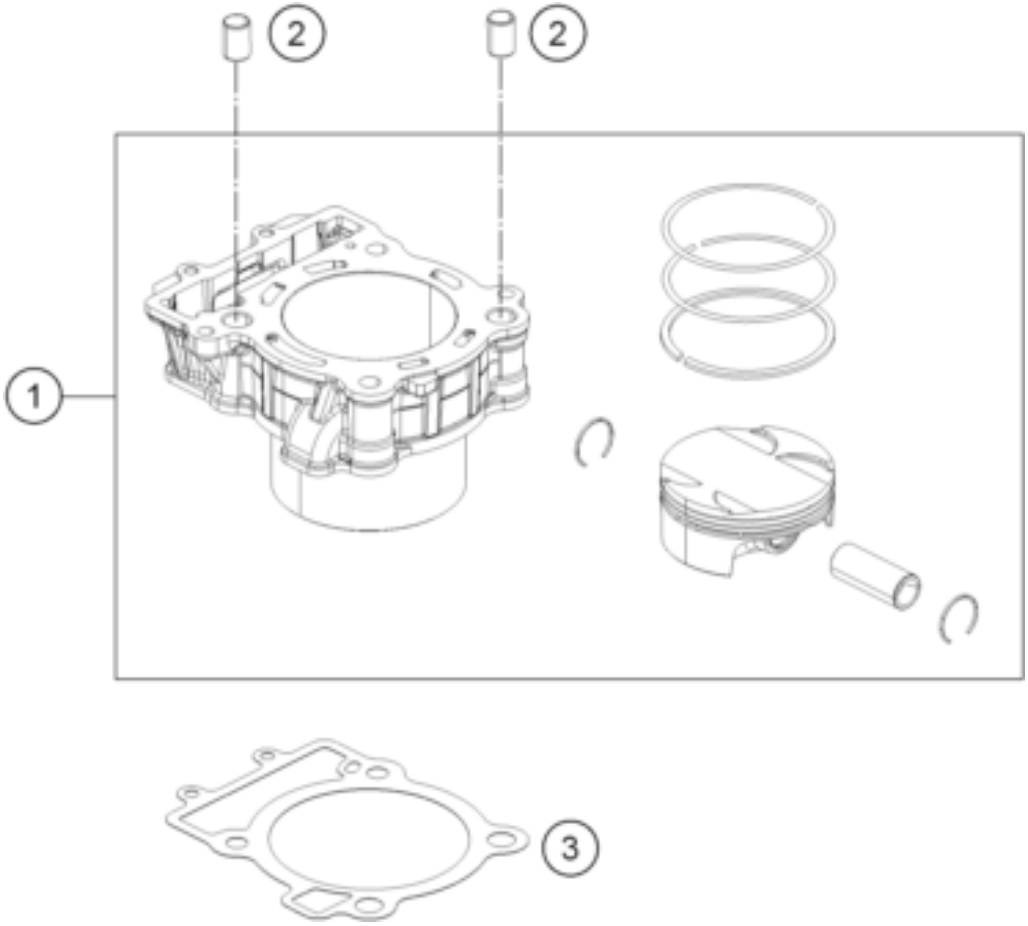

Pos	Part Number	Description	Additional Text	Quantity
1	90230038000	CYLINDER + PISTON CPL.		1.00
2	90130003007	DOWEL D14		2.00
3	90230035000	GASKET CYLINDER BLOCK		1.00