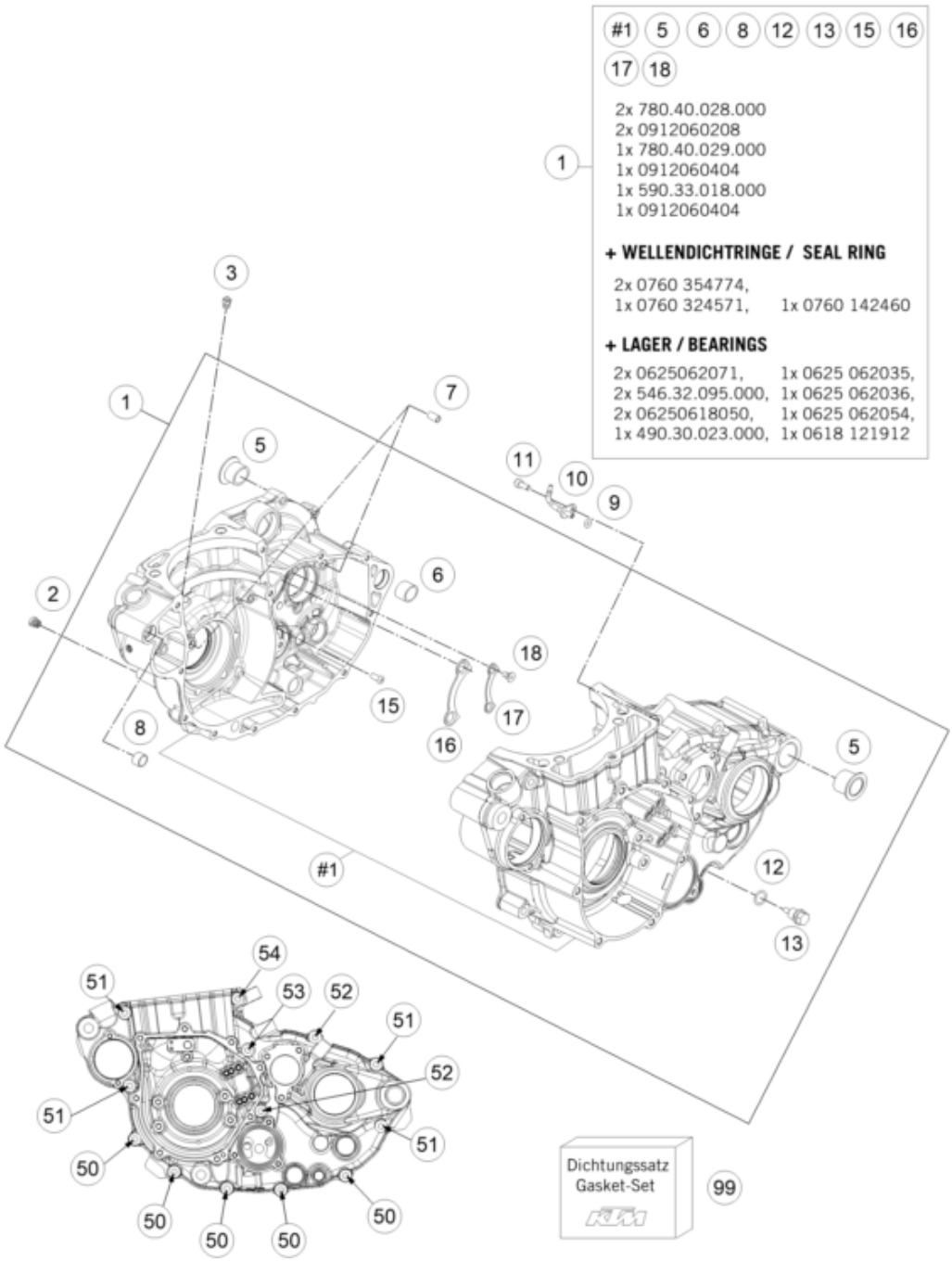

Pos	Part Number	Description	Additional Text	Quantity
1*	78130100033	ENGINE CASE CPL.		1.00
2	57031523145	MAIN JET 145		1.00
3	60030063070	oil jet 70 M5		1.00
5	75030010100	CASE BUSH		2.00
6	54830027000	DOWEL 21X12 03		1.00
7	59030023000	dowel sleeve 6x8x11.5		2.00
8	51030026100	DOWEL 17 X 13 X 12		1.00
9	0770035020	O-RING 3,5X2,00 NBR		1.00
10	81230064000	OIL JET ANGLED 70		1.00
11	0912040103	AH.SCREW DIN0912-M 4X10		1.00
12	58038022000	CU-seal ring DIN7603-12X18X1.5		1.00
13	58030021000	OILDRAIN PLUG W.MAG. M 12X1,5		1.00
15	0018050103	INT. TORX OVAL HEAD M 5X10 8.8		1.00

16	78033032000	TAB WASHER BEARING MAIN SHAFT		1.00
17	78033132000	TAB WASHER BEARING COUNT.SHAFT		1.00
18	0019050121S	INT. TORX FLAT HEAD M5X12 T25		4.00
50	0025060406	HH collar screw M6x40 TX30		5.00
51	0025060606	HH collar screw M6x60 TX30		4.00
52	0025060756	HH COLLAR SCREW M6X75 TX30		2.00
53	0025060806	HH COLLAR SCREW M6X80 TX30		1.00
54	0025060856	HH COLLAR SCREW M6X85 TX30	ONLY FOR CASE 77230000144	1.00
99	78130099000	GASKET SET 450/500 EXC 12		1.00

* = New part