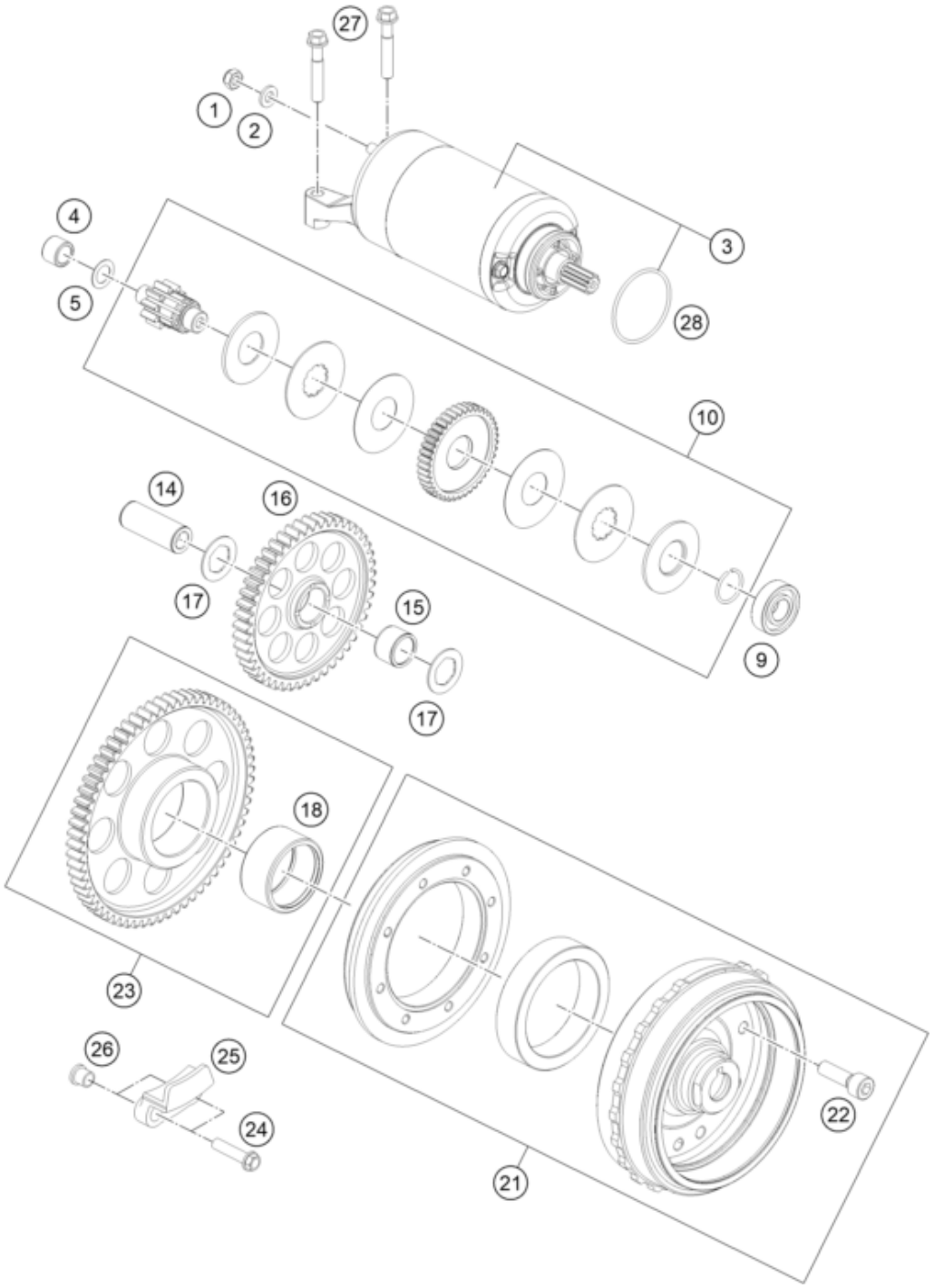

Pos	Part Number	Description	Additional Text	Quantity
1	0985060003	Self lock. nut DIN985-M6-A2		1.00
2	0125060003	WASHER DIN0125-A 6,4		1.00
3	61340001000	STARTER MOTOR		1.00
4	0618101410	needle sleeve HK 1010 10x14x10		1.00
5	60038007010	washer 10x16x0.5		1.00
9	0625060016	deep groove ball bearing 6001.		1.00
10	60340017100	TORQUE LIMITER 10/55 CPL.		1.00
14	61230058050	BEARING BOLT 15X39 08		1.00
15	0405151913	needle roller and cage assy. K		1.00
16	60340022000	IDLER GEAR 43T		1.00
17	61230057060	STOP DISK 15,2X25X1		2.00

18	0618354220	NEEDLE BUSH HK3520 35/42/20		1.00
21	60239105000	ROTOR		1.00
22	0912060206	AH SCREW DIN 912 M6X20		8.00
23	60340020000	FREEWHEEL GEAR CPL.		1.00
24	0025060256	HH collar screw M6x25 TX30		2.00
25	60040027000	FREEWHEEL HOLDER 03		1.00
26	60040027050	SUPPORTING SLEEVE 03		2.00
27	0025060300	HH COLLAR SCREW M6X30 INOX		2.00
28	0770033020	O-RING 33,75X2,00		1.00