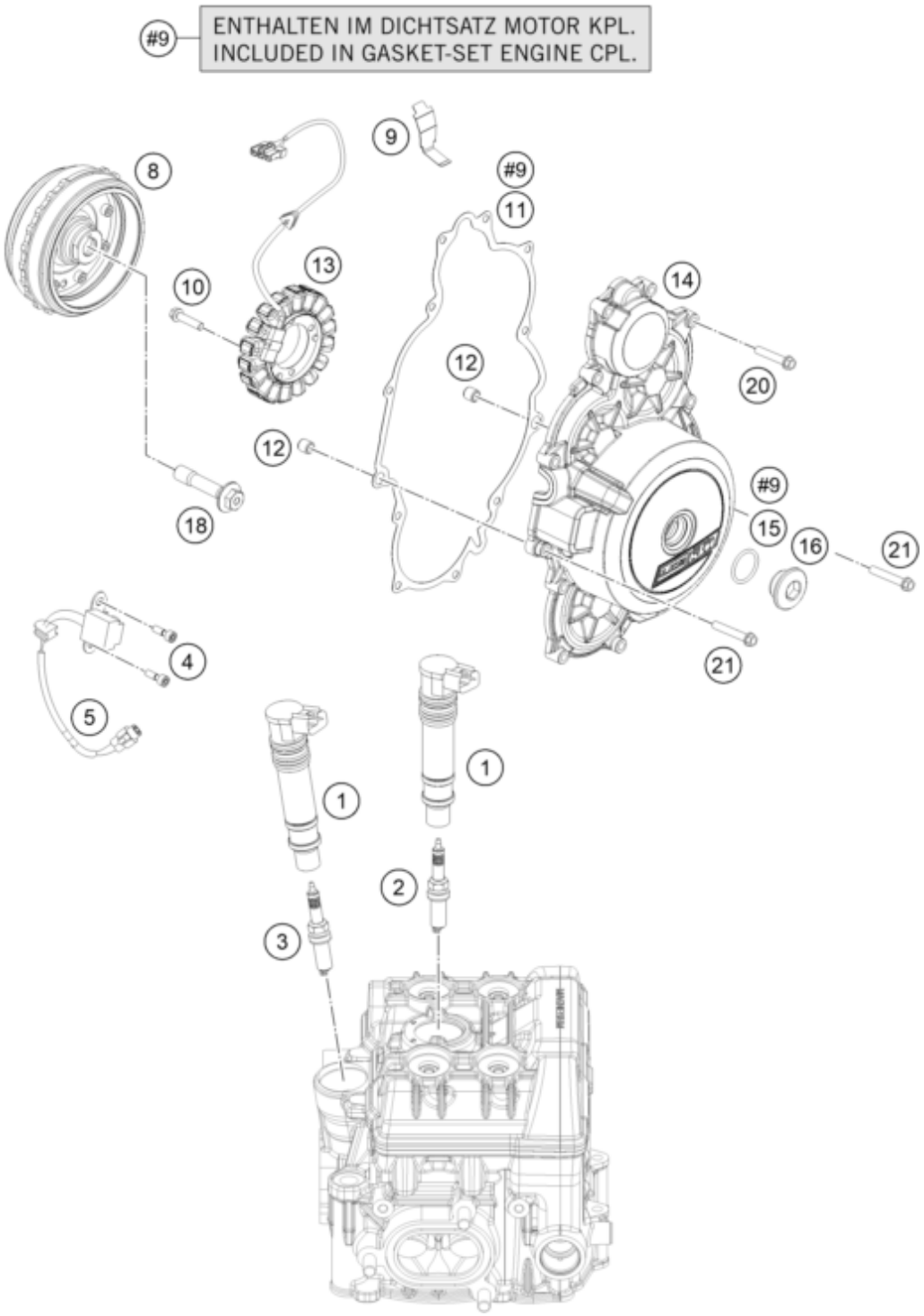

Pos	Part Number	Description	Additional Text	Quantity
1	60039006000	STICK COIL 03		4.00
2	61239093200	SPARK PLUG M12X1,25 08		2.00
3	69139093000	SPARK PLUG NGK "LMAR7A-9"		2.00
4	60339035000	SPECIAL SCREW M5X16		2.00
5	59039034000	pulse generator KOKUSAN 4K3-A/		1.00
8	60239105000	ROTOR		1.00
9	60039040020	generator line bracket		1.00
10	0025060256	HH collar screw M6x25 TX30		4.00
11	61230040000	IGNITION COVER GASKET 08		1.00
12	49030090000	DOWEL 9,8 X 7 X 10	FS-E	2.00

13	60339004000	STATOR		1.00
14	6023010204441	IGNITION COVER WITH BEARING		1.00
15	07700240251	o-ring 24.00x2.50 Viton		1.00
16	6003009400030	threaded plug M24x1.5 PA 6.6		1.00
18*	60339003000	special screw M12x1.5 WS15		1.00
20	0025060306	HH collar screw M6x30 TX30		10.00
21	0025060356	HH collar screw M6x35 TX30		2.00

* = New part