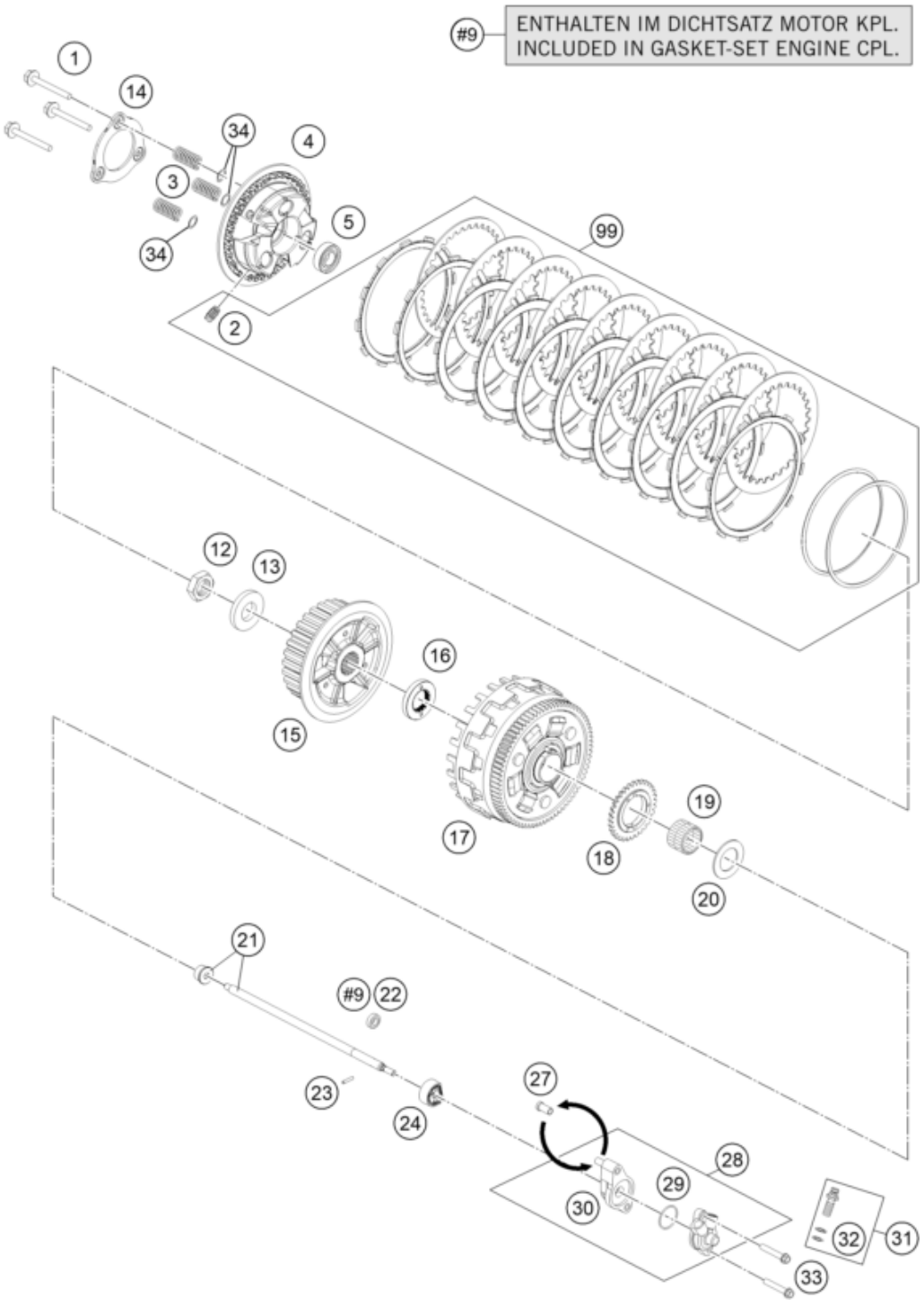

Pos	Part Number	Description	Additional Text	Quantity
1	61332044000	HH collar screw M6X45 WS10		3.00
2	61332007000	DAMPER		3.00
3	61332005000	CLUTCH SPRING		3.00
4	61332003000	PRESSURE CAP		1.00
5	0625060032	BALL BEARING 6003 JR2 C4		1.00
12	0936220155	HEXAGON NUT DIN0936-M22X1,5 R.		1.00
13	0126220373	WASHER DIN0126 22X37X3 MM		1.00
14	61332006000	ARRESTOR PRESSURE CAP		1.00
15	61332002000	INNER CLUTCH HUB		1.00
16	60032021000	SECTION WASHER 03		1.00
17	61332001044	CLUTCH CAGE CPL.		1.00

18	60038001132	oil pump gear 32 teeth		1.00
19	0618303526	Needle bushing HK 30X35X26		1.00
20	60032020000	STOP DISK 30,2/50/2		1.00
21	60232054000	PUSH ROD CPL. 110MM		1.00
22	0760091862	SHAFT SEAL RING 9X18X06 B-NBR		1.00
23	0402031780	Needle roll.DIN5402 NRB 3X17.8		1.00
24	61232069000	PUSH ROD GUIDE		1.00
27	61232061051	SLEEVE CLUTCH CONTR.		2.00
28	60032061244	SLAVE CYLINDER CPL. LC8 08		1.00
29	60032065000	O-RING GASKET 03		1.00
30	60032061050	DISTANCE CLUTCH CONTR. CPL.		1.00
31	50332062000	Hollow screw cmpl. M 10x1 98		1.00
32	0603100141	sealing ring DIN 7603 10x14x1	ONLY FOR LC4 ADVENTURE	2.00
33	0025060456	HH COLLAR SCREW M6X45 TX30		2.00
34	61332004000	SUPPORT CLUTCH SPRING		3.00
99	60432011010	CLUTCH KIT 1190/1290		0.00