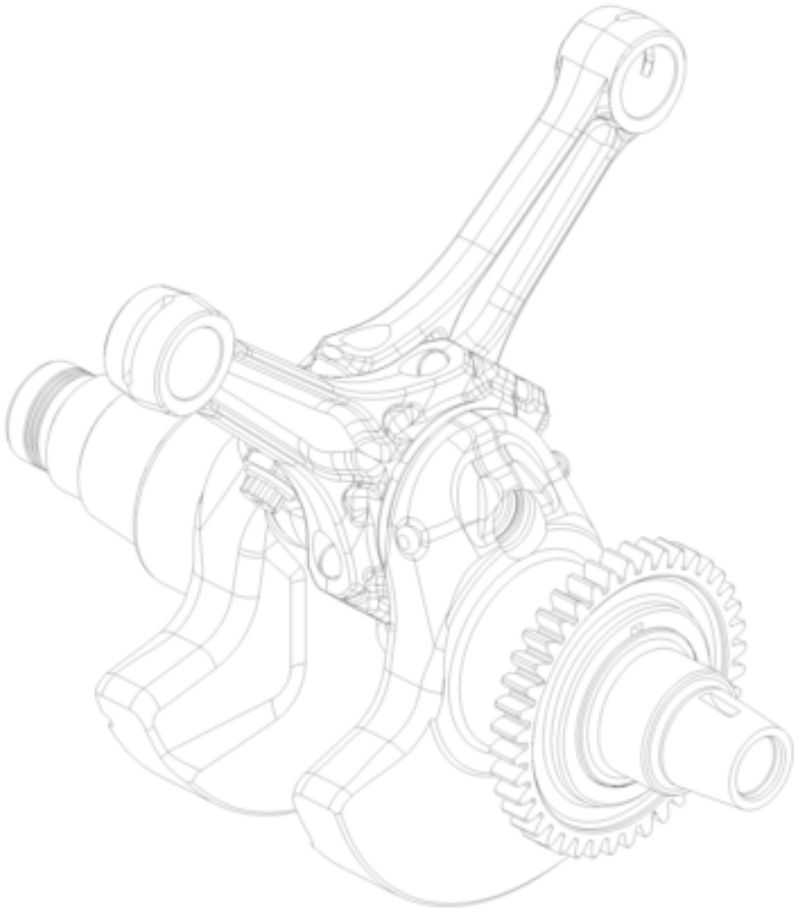

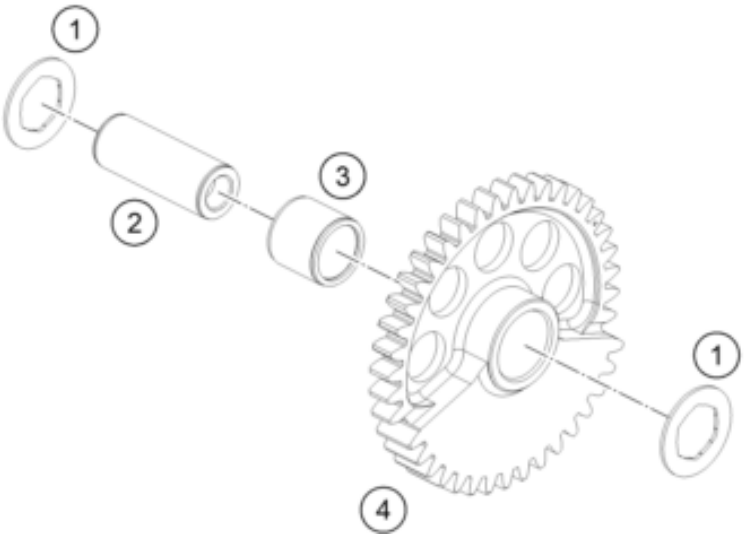

Pos	Part Number	Description	Additional Text	Quantity
1	61230057060	STOP DISK 15,2X25X1		2.00
2	61230058050	BEARING BOLT 15X39 08		1.00
3	0405151917	needle roller and cage assy. K		1.00
4	61330058000	BALANCER SHAFT FRONT		1.00