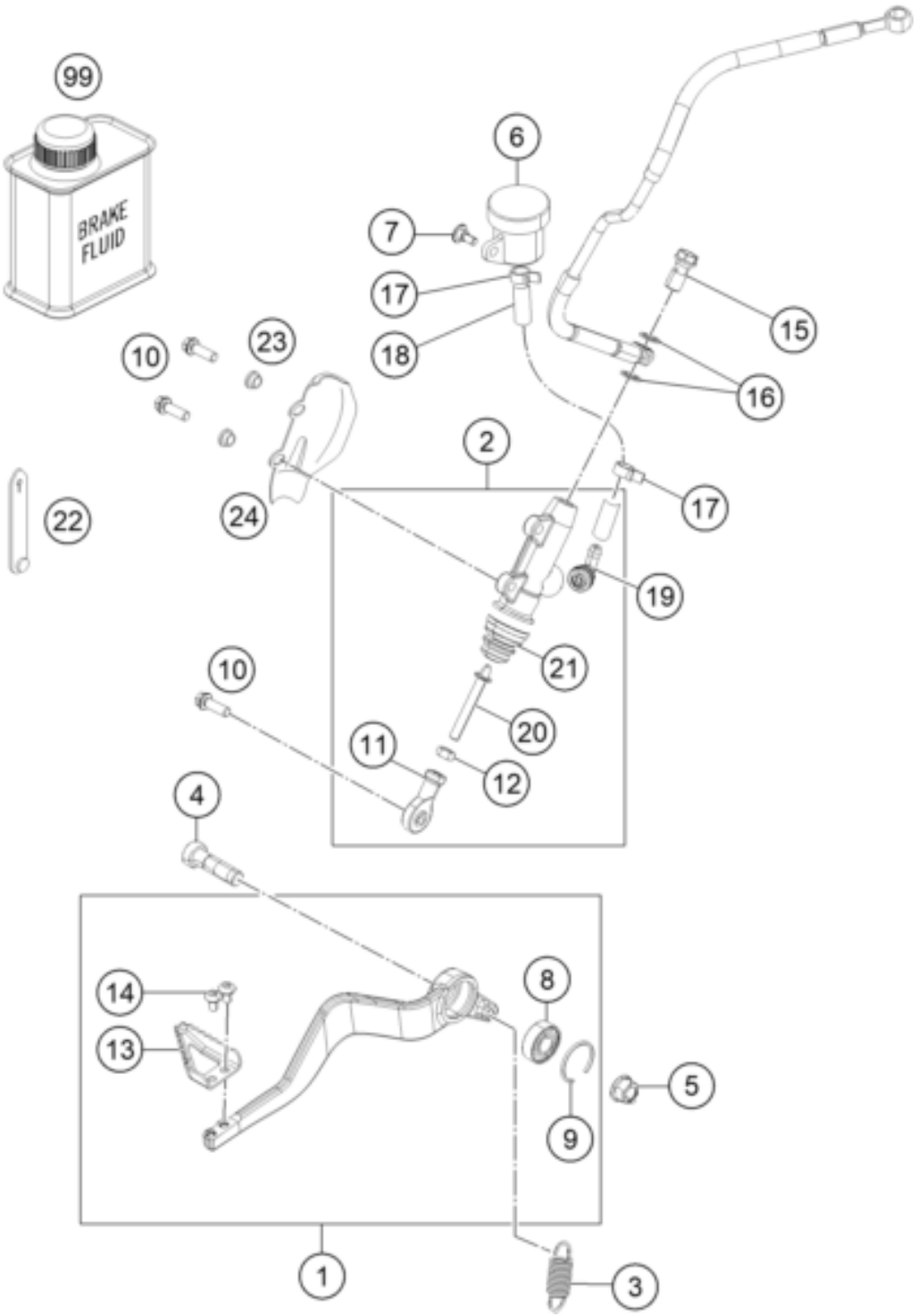

Pos	Part Number	Description	Additional Text	Quantity
1	6031305004433S	FOOT BRAKE LEVER KPL.		1.00
2	6031306000030	REAR BRAKE CONTROL		1.00
3	54603062000	RETURN SPRING FOR BRAKELEVER		1.00
4	0032100356S	AH-COLLAR SCREW M10X35 ISA45		1.00
5	54630044000	COLLAR NUT M10 WS=13		1.00
6	54513030044	BRAKE FLUID RESERVOIR '89		1.00
7	69013099050	Screw for expansion tank	ONLY AUS	1.00
8	0625060002	deep groove ball bearing SKF 6		1.00
9	0993026500	round wire snap ring DIN 7993		1.00
10	0025060206	HH collar screw M6x20 TX30		3.00

11	54603069000	SWIVEL HEAD M6 FOOT BRAKE LEV.		1.00
12	0934060003	Hex. nut DIN 934 M6		1.00
13	60313051000	STEP PLATE FOOT BRAKE LEVER		1.00
14	58605083010	SCREW TORX M5X10 05		2.00
15	62113020100	banjo bolt M10x1x19.5		1.00
16	0603100141	sealing ring DIN 7603 10x14x1	ONLY FOR LC4 ADVENTURE	2.00
17	58007017000	YDNAC-clamp 10101 (10.4MM)	300 TPI Erzbergrodeo	2.00
18	69013069001	HOSE FOR RESERVOIR 6X1,5	1X 60MM, 1X 195MM	1.00
19	54513155000	ANGLE PIECE		1.00
20	60313056044	PUSH ROD CPL.		1.00
21	54513151000	RUBBER SLEEVE		1.00
22	60011093045	RUBBER CABLE TIE 45MM 03		1.00
23	50213161000	COLLAR BUSHING		2.00
24	54513038000	BRAKE CYL. PROTECTOR "BREMBO'		1.00
99	00062030000	Brake fluid DOT5.1 0,25L		1.00