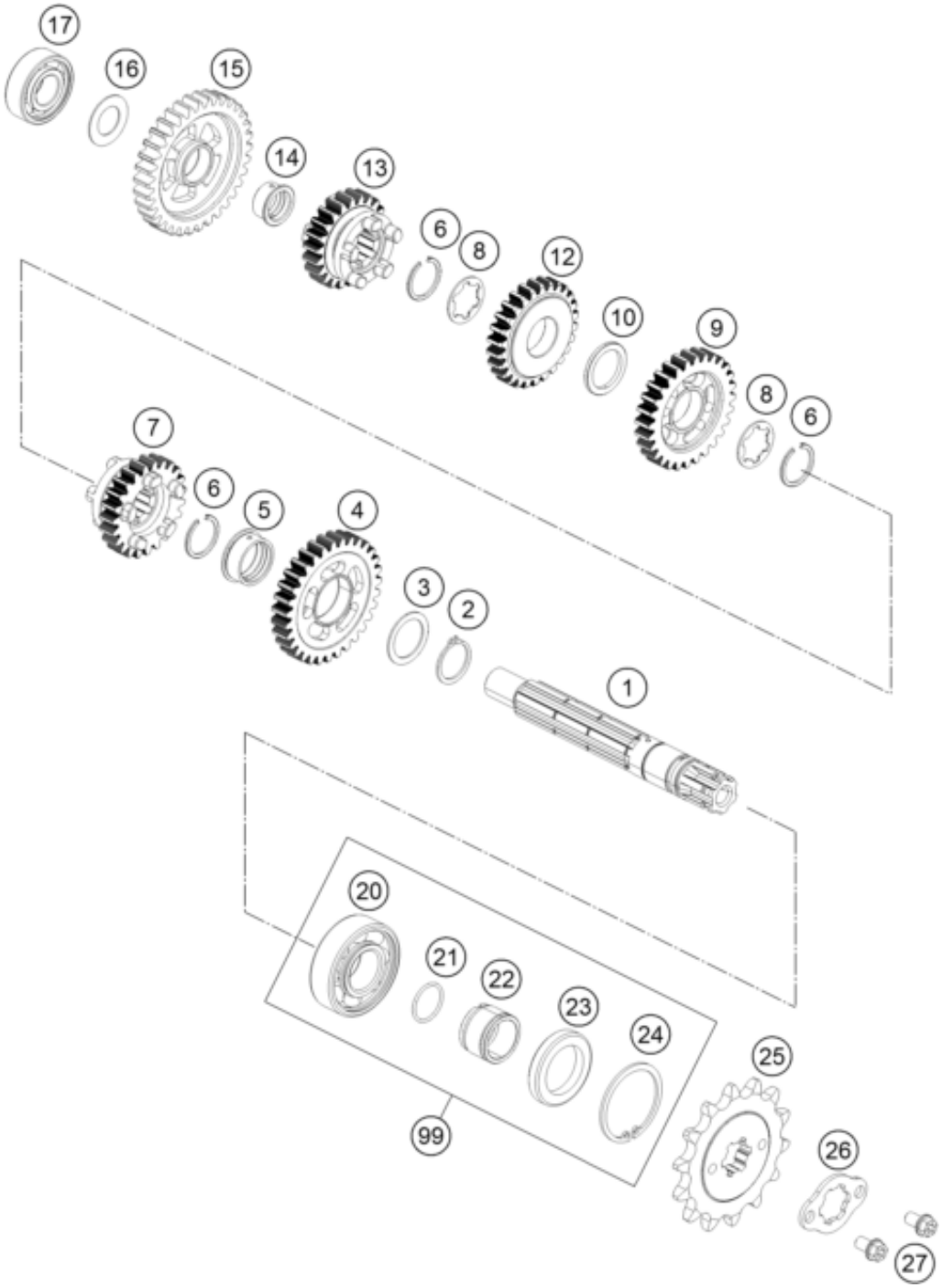

Pos	Part Number	Description	Additional Text	Quantity
1	90633010000	COUNTER SHAFT CPL.		1.00
2	J471020121	CIRCLIP 20X1,2		1.00
3	90133034100	WASHER 20,2X27X1		1.00
4	90633012000	COUNTERWHEEL 2. GEAR		1.00
5	90133001003	BUSHING		1.00
6	J471020122	CIRCLIP 20X1,2		3.00
7	90133015000	COUNTERWHEEL 5. GEAR		1.00
8	90633033000	WASHER		2.00
9	90133013000	COUNTERWHEEL 3. GEAR		1.00
10	90633001007	THRUST WASHER		1.00
12	90133014000	COUNTERWHEEL 4. GEAR		1.00
13	90133016000	COUNTERWHEEL 6. GEAR		1.00

14	90133001009	BUSHING		1.00
15	90133011000	COUNTERWHEEL 1. GEAR		1.00
16	J125150006	Washer 15X26X0,8		1.00
17	90130004003	BALL BEARING 15X35X11		1.00
20	J625062041	BALL BEARING 6204-Z/HN3		1.00
21	J770017515	O-RING 17,5X1,5		1.00
22	90133029003	BUSHING SPROCKET		1.00
23	J760253706	SHAFT SEAL RING 25X37X6		1.00
24	J472037150	CIRCLIP 37X1,5		1.00
25	90133029014	SPROCKET 14T.		1.00
26	90133029001	BRACKET SPROCKET		1.00
27	J025060106	HH COLLAR SCREW M6X10 WS10		2.00
99	00050000944	COUNTER SHAFT REP. KIT 125DUKE		0.00