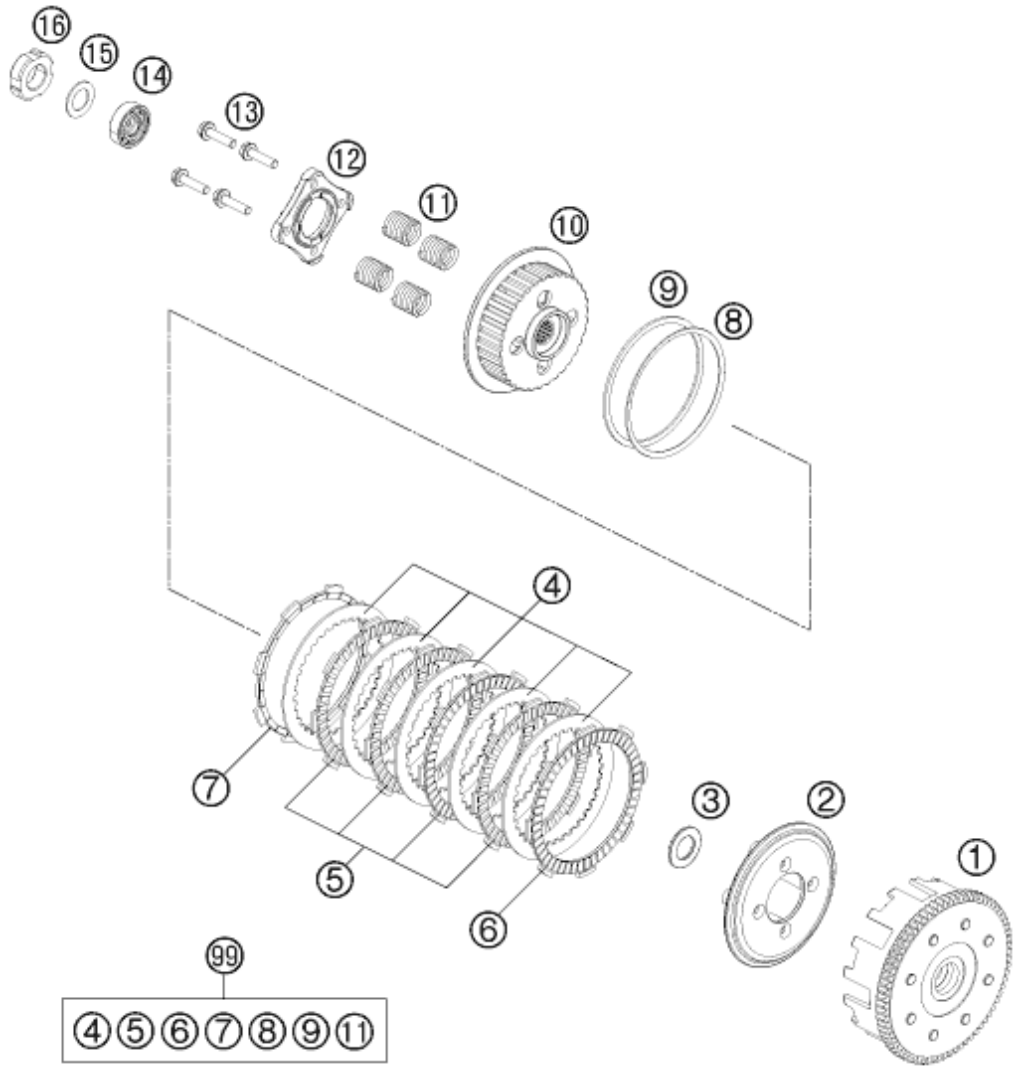

Pos	Part Number	Description	Additional Text	Quantity
1	90632001044	OUTER CLUTCH HUB CPL.		1.00
2	90132003000	PRESSURE CAP		1.00
3	90132020000	STOP DISK		1.00
4	90132010000	INTERMEDI. DISC		5.00
5	90132011000	LINING DISK		4.00
6	90132111000	LINING DISK INSIDE		1.00
7	90132211000	LINING DISC TURNED OFF		1.00
8	90132034000	BELLEVILLE SPRING		1.00
9	90132035000	SUPPORT RING		1.00
10	90632002000	INNER CLUTCH HUB		1.00
11	90632005000	CLUTCH SPRING		4.00
12	90132006000	PRESSURE PLATE		1.00
13	90132001001	COLLAR SCREW 6X25		4.00
14	90132095000	CLUTCH LIFTER BEARING		1.00
15	90632038000	BELLEVILLE SPRING		1.00
16	90132019000	CLUTCH NUT		1.00
99	90632011010	CLUTCH KIT 200 DUKE 12-15		0.00