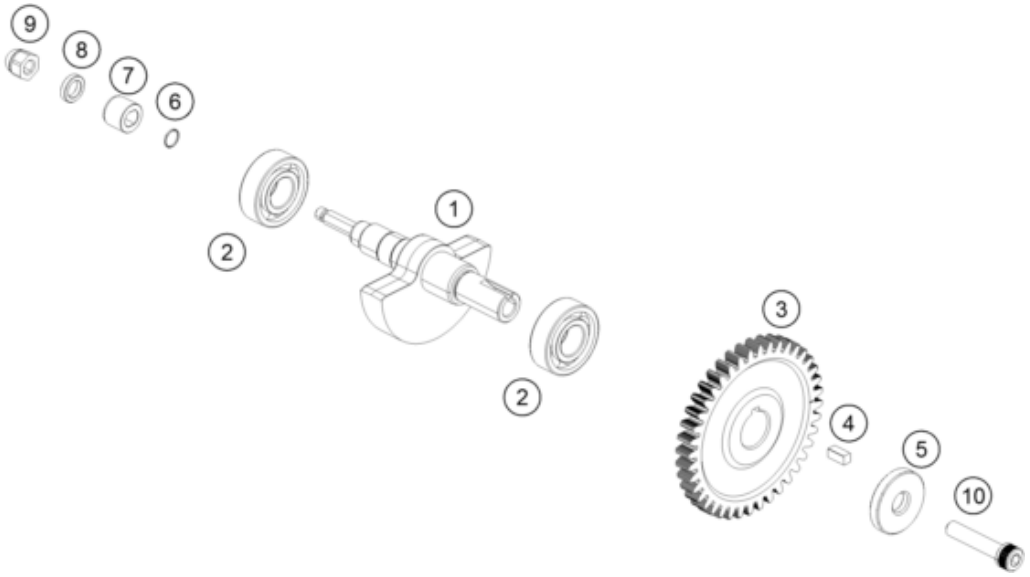

Pos	Part Number	Description	Additional Text	Quantity
1	90630057100	BALANCER SHAFT		1.00
2	J625062030	BALL BEARING 6203		2.00
3	90130055000	DRIVE WHEEL BALANCER SHAFT		1.00
4	90130055001	Parallel key		1.00
5	90130057050	WASHER 8,2X26X4,5 "O"		1.00
6	J770875008	O-RING 8,75X0,8		1.00
7	90130055104	SLEEVE		1.00
8	90130055006	SPACER SHIM		1.00
9	90135058000	DOME NUT WAPU-WHEEL		1.00
10	90130055003	SPECIAL SCREW BALANCER SHAFT		1.00