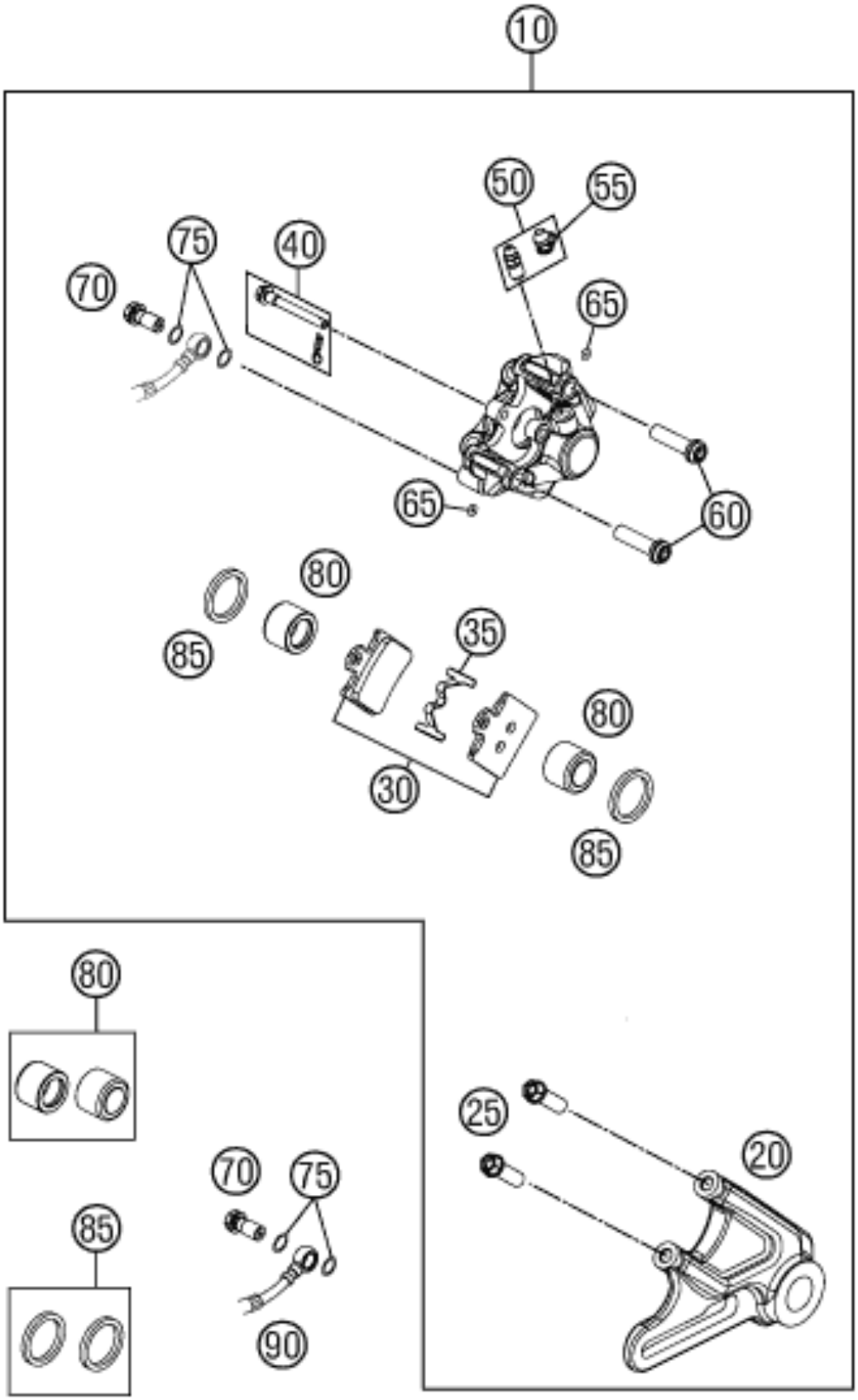

Pos	Part Number	Description	Additional Text	Quantity
10	47013080300	BREAK CALIPER REAR CPL. 2011		1.00
20	47013075000	BRAKE CALIPER SUPPORT CPL.		1.00
25	0025080256	HH collar screw M8x25	A400C102Z106102	2.00
30	47013090300	BRAKE PADS REAR 85 SX 2011		1.00
35	47013018000	RETAINING SPRING 85 SX 2011		1.00

40	47013092000	SPECIAL SCREW WITH SPLINT PIN		1.00
50	47013085000	BLEEDER SCREW M8X1		1.00
55	47013021000	CAP FOR BLEEDER SCREW		1.00
60	47013084000	SPECIAL SCREW CALIPER M8X30		2.00
65	07700257178	O-RING 2,57X1,78		2.00
70	47013025000	Hollow screw, brake cylinder 0		1.00
75	0770080019	O-RING 8,00X1,00 FORMULA		2.00
80	47013083200	REPAIR KIT BRAKEPISTON 2011		1.00
85	47013081100	REP. KIT SEAL. RINGS REAR 2011		2.00
90	47013070000	BRAKE HOSE REAR 85 SX 03		1.00