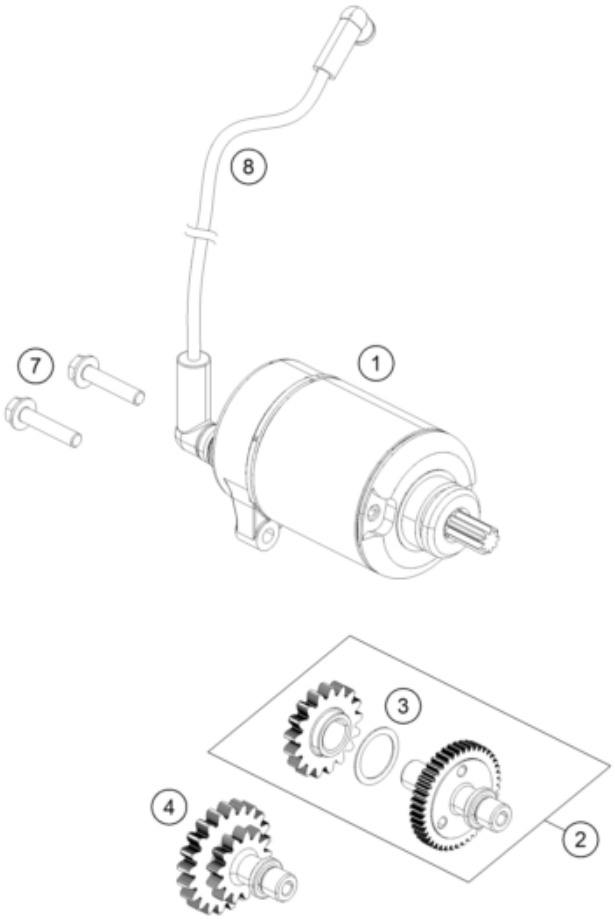

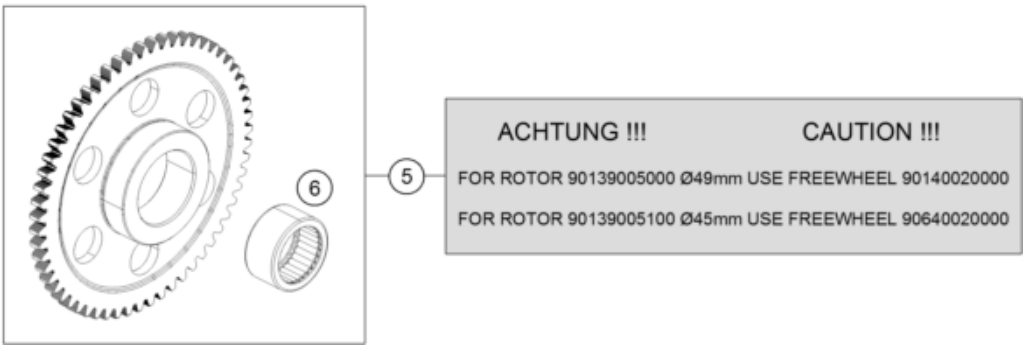

Pos	Part Number	Description	Additional Text	Quantity
1	90140001000	E-STARTER ENGINE CPL.		1.00
2	90140023033	TORQUE LIMITER CPL.		1.00
3	90140023060	SHIM 0,6 MM		1.00
3	90140023075	SHIM 0,75 MM		0.00
3	90140023090	SHIM 0,9 MM		0.00
3	90140023045	SHIM 0,45 MM		0.00
4	90140022000	INTERMEDIATE STARTING GEAR		1.00
5	90640020000	FREEWHEEL GEAR CPL.		1.00
6	J618253216	NEEDLE ROLLER BEARING HK2516		1.00
7	J025060256	HH COLLAR SCREW M6X25 SW10		2.00
8	90111059000	STARTER CABLE		1.00