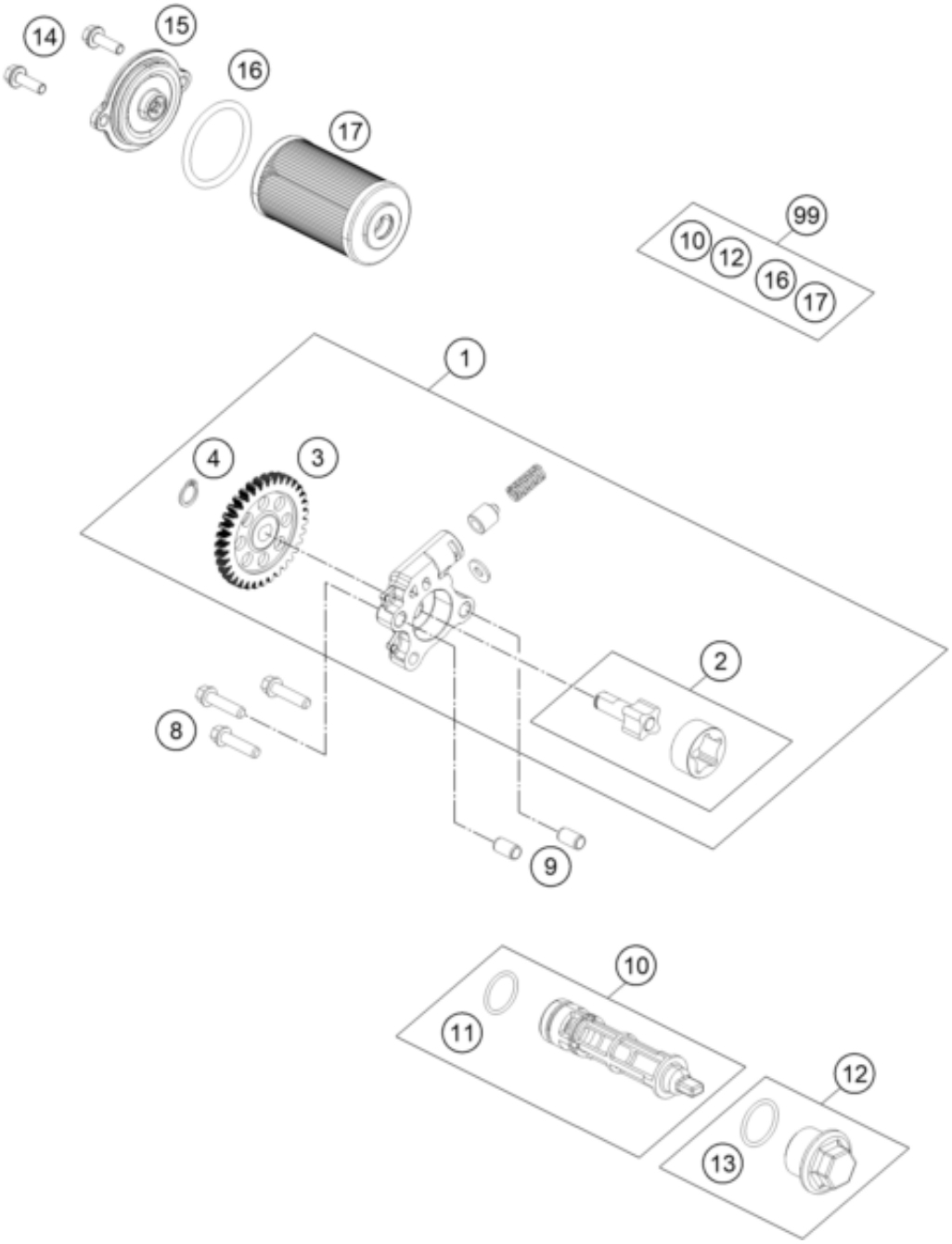

Pos	Part Number	Description	Additional Text	Quantity
1	90138007133	OIL PUMP ASSY		1.00
2	90138002044	OIL PUMP SHAFT CPL.		1.00
3	90138001000	OIL PUMP GEAR		1.00
4	J471010100	Seeger ring 10X1,0		1.00
8	J028060303S	HH COLLAR SCREW M6X30 WS8		3.00
9	90130024000	PIN DOWEL 8X6,4X14MM	14mm length	2.00
10	90238015033	MESH STRAINER CPL.		1.00
11	J770017721	O-RING 17,7X2,1 MM		1.00
12	90138015050	CLOSURE CAP OIL SCREEN		1.00
13	90138015052	O-RING		1.00
14	J025050166	HH COLLAR SCREW M5X16 SW8		2.00
15	90138015060	OIL FILTER COVER		1.00
16	J770039326	O-RING 39,34X2,62		1.00

17	90138015000	OIL FILTER		1.00
99	90138015010	OILFILTER SERVICE KIT 125 DUKE		0.00