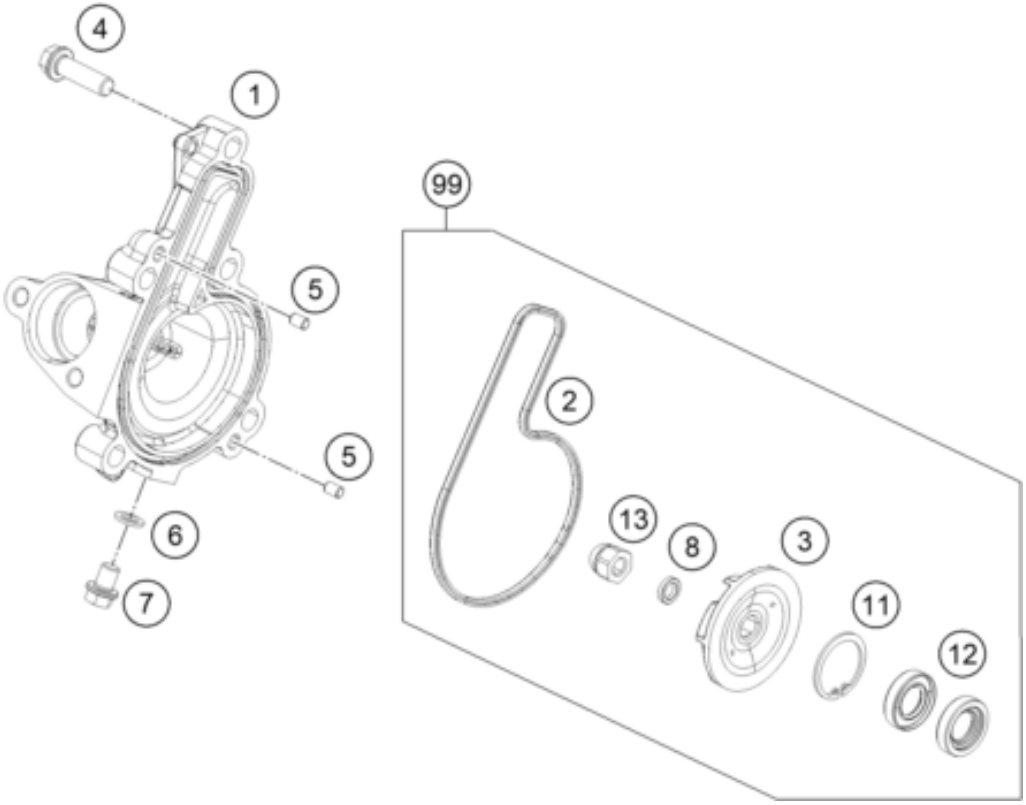

Pos	Part Number	Description	Additional Text	Quantity
1	90135052000	WATERPUMP COVER		1.00
2	90135053000	WATER PUMP COVER GASKET		1.00
3	90135055000	WATER PUMP ROTOR		1.00
4	J025060206	HH COLLAR SCREW M6X20 SW10		5.00
5	90134013000	Parallel pin		2.00
6	J603061001	COPPER GASKET		1.00
7	90110057000	BOLT M6X10		1.00
8	90130055006	SPACER SHIM		1.00
11	J472025120	CIRCLIP 25X1,2		1.00
12	J760122455	SHAFT SEALING RING 12X24X5,5		2.00
13	90135058000	DOME NUT WAPU-WHEEL		1.00
99	90135055110	WATER PUMP REP. KIT DUKE		0.00