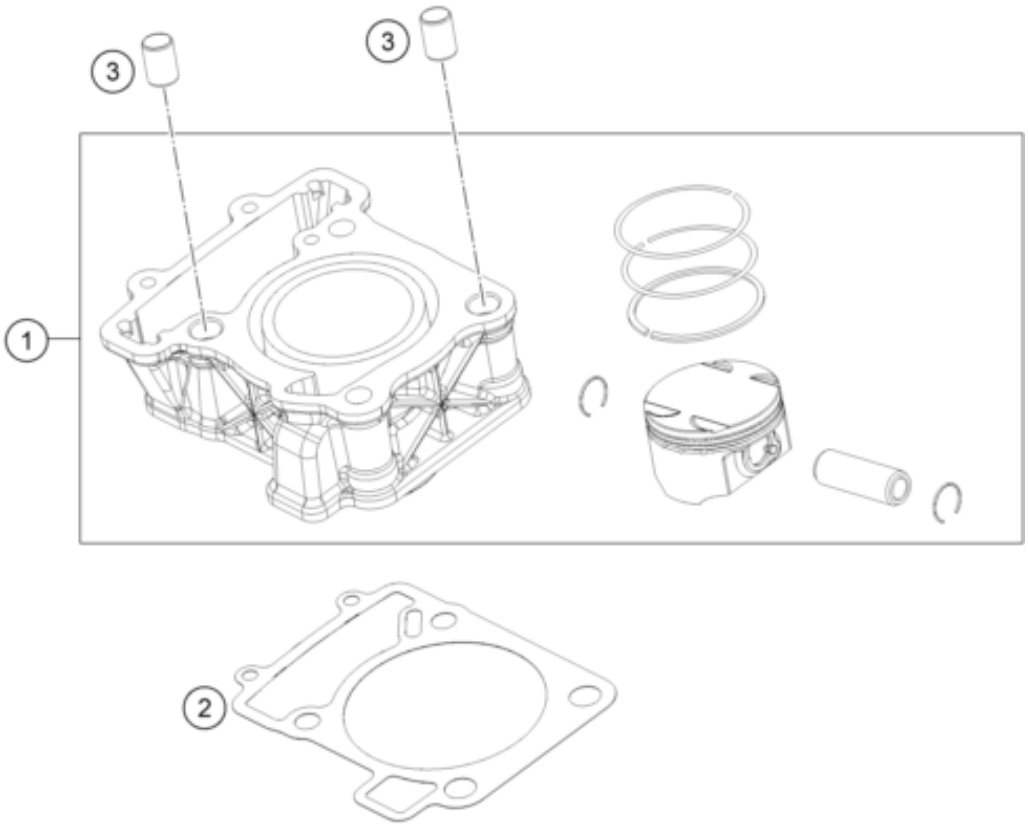


| Pos | Part Number | Description | Additional Text | Quantity |
|---|---|---|---|---|
| 1 | 90130038000 | CYLINDER + PISTON KIT | | 1.00 |
| 2 | 90130035000 | CYLINDER BASE GASKET | | 1.00 |
| 3 | 90130003007 | DOWEL D14 | | 2.00 |