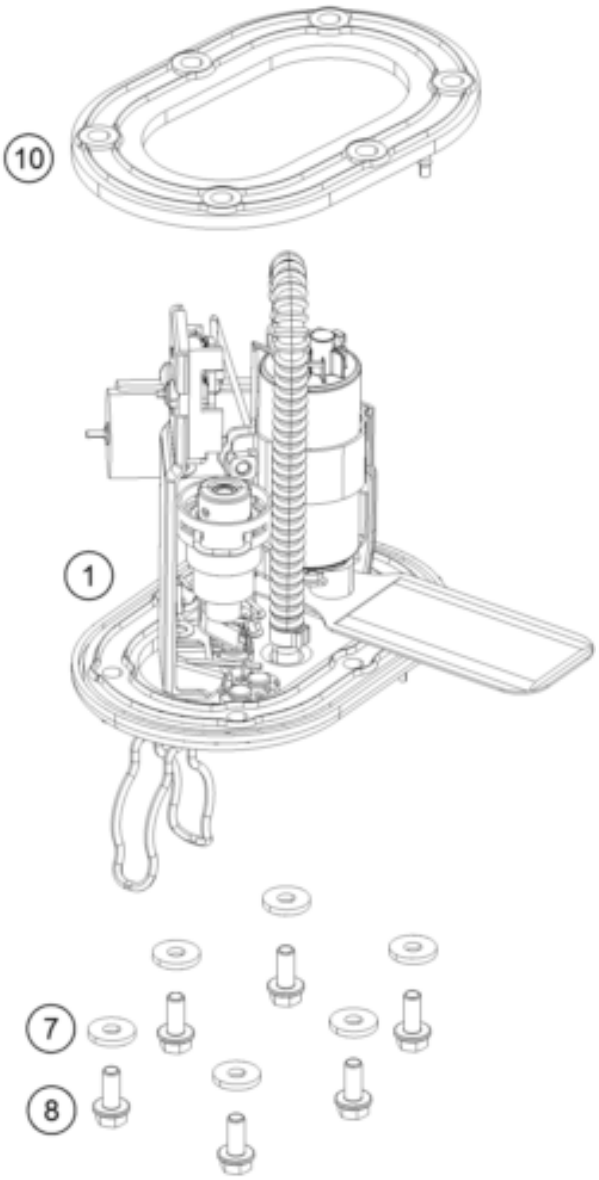

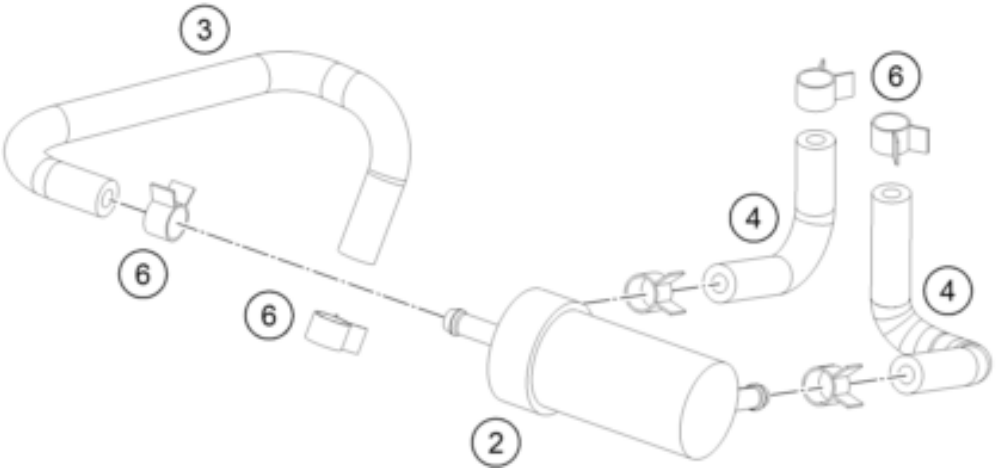

Pos	Part Number	Description	Additional Text	Quantity
1	90107088000	FUEL PUMP		1.00
2	90107018000	FUEL FILTER		1.00
3	90107018010	FUEL HOSE R9		1.00
4	90107018020	FUEL HOSE		2.00
6	90107018011	CLAMP 10MM		6.00

7	90107088050	WASHER 5,2X14X2MM		6.00
8	J025050123	HH COLLAR SCREW M5X12 SW8		6.00
10	90107088002	GASKET F. FUEL PUMP		1.00