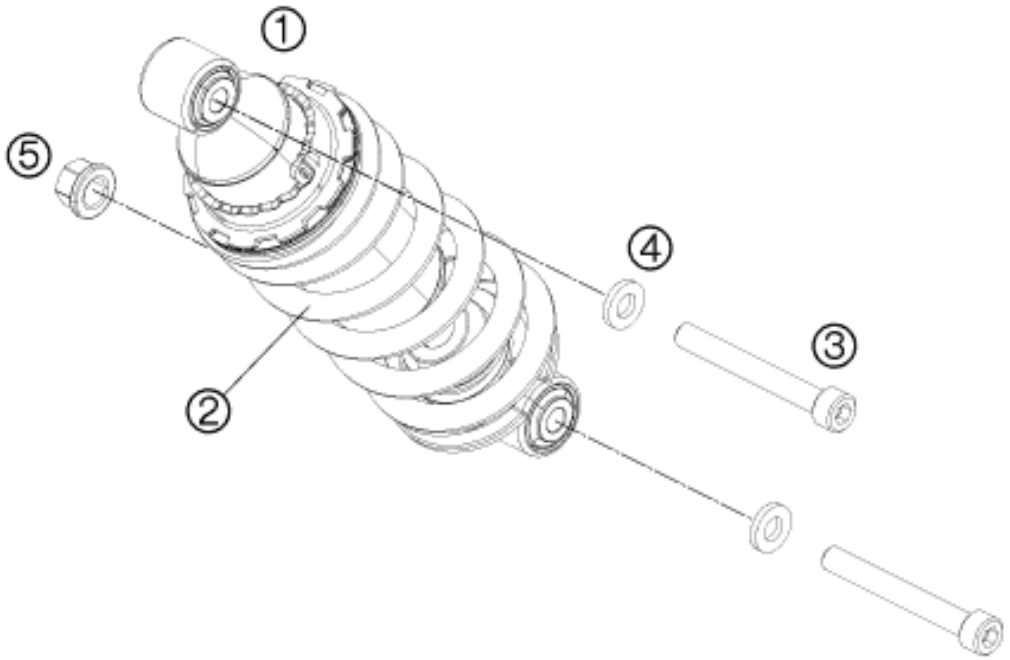

Pos	Part Number	Description	Additional Text	Quantity
1	90604010000	SHOCK ABSORBER CPL.		1.00
2	90104011000	SPRING MONOSHOCK		1.00
3	J020100806	SHCS M10x1.25x80 - 10.9		2.00
4	90104010003	PLAIN WASHER 10,2X20X3MM		2.00
5	90104010002	flanged hex nut M10x1.25 WS13		1.00