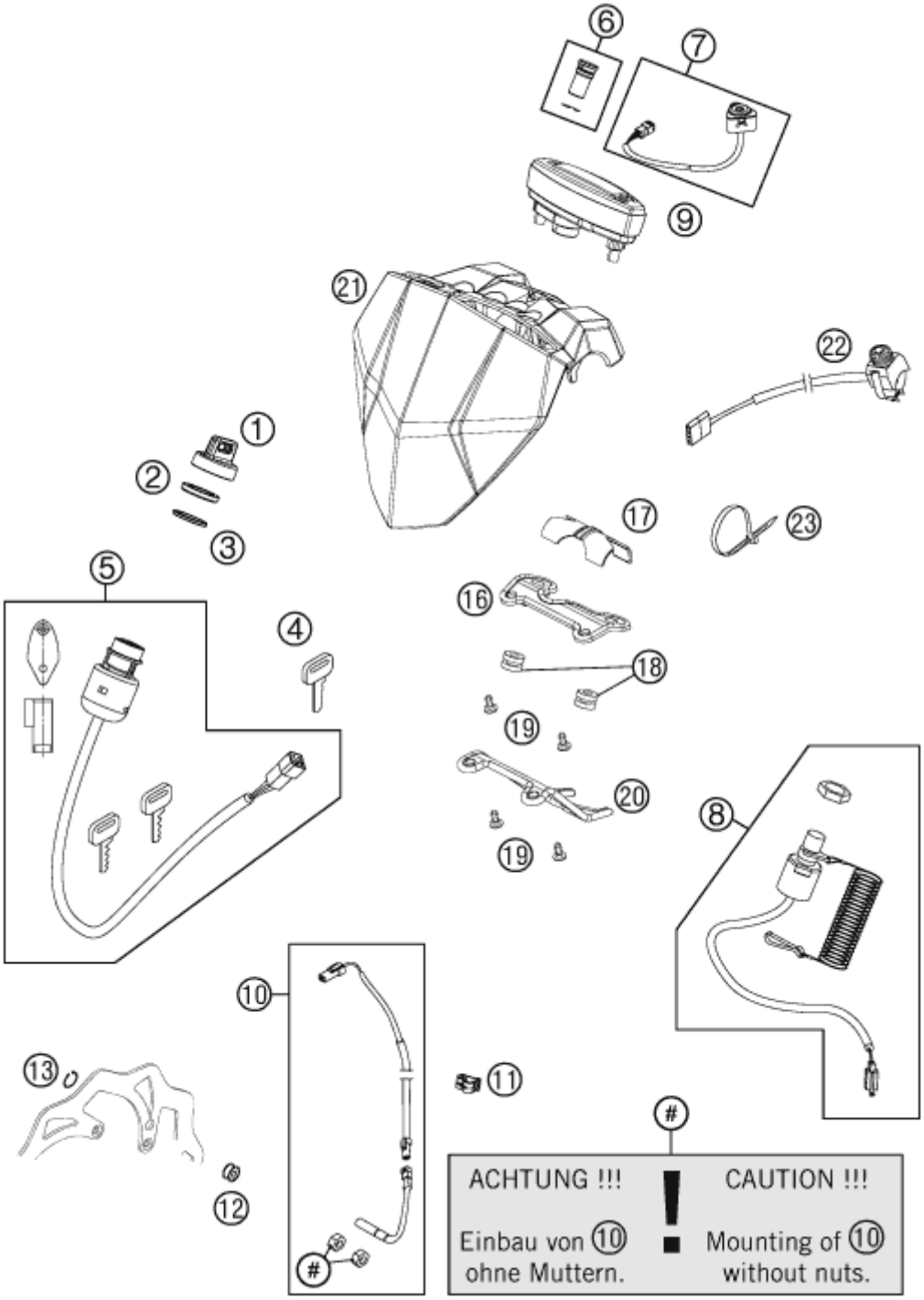

Pos	Part Number	Description	Additional Text	Quantity
1	83011067050	KEY COVER CAP		1.00
2	50311066050	IGNITION LOCK NUT M24X1		1.00
3	58411066450	WASHER F. IGNITION LOCK 03		1.00
4	40011166200	KEY BLANK BLACK "T" GR		1.00
5	83011066044	LOCK SET		1.00
6	58011021300	H.BEAM INDICATOR LIGHT BLUE'98	EXC EU+AUS	1.00
6	83011022000	REVERSE GEAR CONTROL LAMP		1.00
6	58011024300	FLASHER INDICAT.LIGHT GREEN'98	EXC EU+AUS	1.00
6	58011023300	NEUTRAL INDIC. LIGHT GREEN '98		1.00
7	60211022000	HAZARD WARNING BUTTON		1.00
8	83011089000	TETHER SWITCH		1.00

9	54814069500	SPEEDOMETER DIGITA KHM F.10"		1.00
10	54814068100	CABLE FOR DIGITAL SPEEDOM. 06		1.00
11	83013026000	Line guide		3.00
12	58214069050	SENSOR MAGNET ADVENTURE 01	625 SC SUPERMOTO	1.00
13	0799070000	TAB WASHER DIN6799-RS 7,0	625 SC SUPERMOTO	1.00
16	83014060000	SPEEDOMETER BRACKET		1.00
17	83014170010	HANDLEBAR SUPPORT DASHBOARD		1.00
18	58214069051	rubber grommet 16x10.8x3		2.00
19	0081050121	EJOT PT screw K50x12	only for US and SixDays	4.00
20	83014060050	STIFFENING DASHBOARD SUPPORT		1.00
21	83014070100	DASHBOARD SUPPORT		1.00
22	63011074000	STARTER BUTTON 06		1.00
23	44011076200	Cable tie 200/4.6mm black		1.00