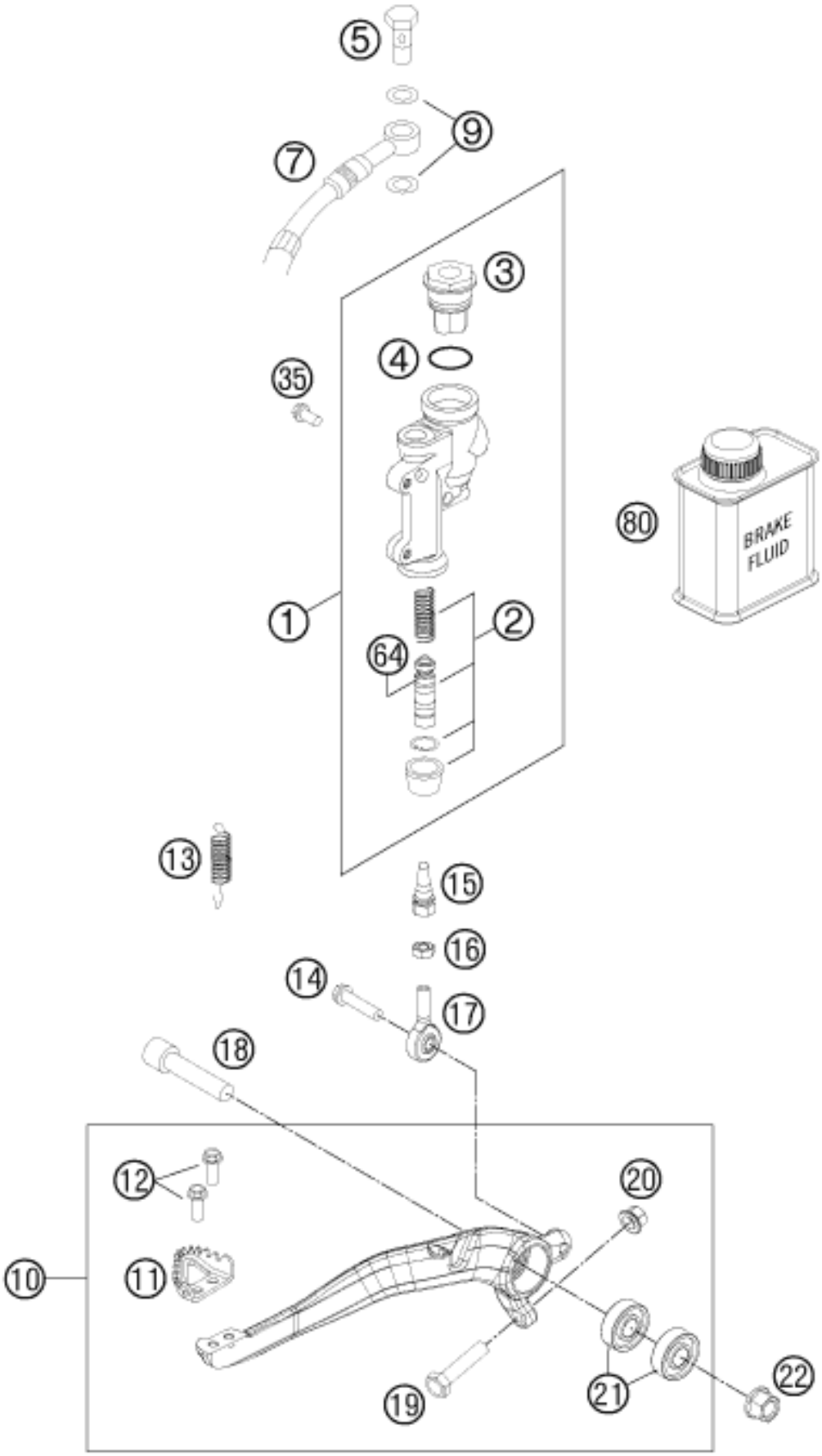

Pos	Part Number	Description	Additional Text	Quantity
1	54813060100	REAR BRAKE CYLINDER CPL. 2004	WITH RUBBER BELLOWS	1.00
2	54813061200	REPAIR KIT PISTON 13MM 06		1.00

3	54813062100	REAR BRAKE CYL. COVER CPL. 04	WITH RUBBER BELLOWS	1.00
4	54813063000	FOOT-BRAKE CYL. GASKET SX 03		1.00
5	54813020100	banjo bolt M10x1x19 black	SX, EXC USA	1.00
7*	77213070000	BRAKE HOSE REAR XXXMM 11		1.00
9	0603100141	sealing ring DIN 7603 10x14x1	ONLY FOR LC4 ADVENTURE	2.00
10*	77213050044	FOOT BRAKE LEVER CPL.		1.00
11	54813051000	STEP PLATE FOR BRAKE LEVER		1.00
12	0025050126	HH collar screw M5x12 TX30		2.00
13	54603062000	RETURN SPRING FOR BRAKELEVER		1.00
14	0025060206S	HH collar screw M6x20 TX30		1.00
15	54813056000	PUSH ROD L=28MM 03		1.00
16	0985060003	Self lock. nut DIN985-M6-A2		1.00
17	54813055000	SWIVEL HEAD KA6 03		1.00
18*	0032100406S	AH-COLLAR SCREW M10X40 ISA45		1.00
19	59001037000	SPECIAL SCREW M8X26 WS=10		1.00
20	46030045000	flanged nut M8 WS10		1.00
21	0625060002	deep groove ball bearing SKF 6		2.00
22	54630044000	COLLAR NUT M10 WS=13		1.00
35	0025060126	HH collar screw M6x12 TX30		2.00
64	54813064200	BELLOWS FOR REPAIR KIT 06		1.00
80	00062030000	Brake fluid DOT5.1 0,25L		1.00

* = New part