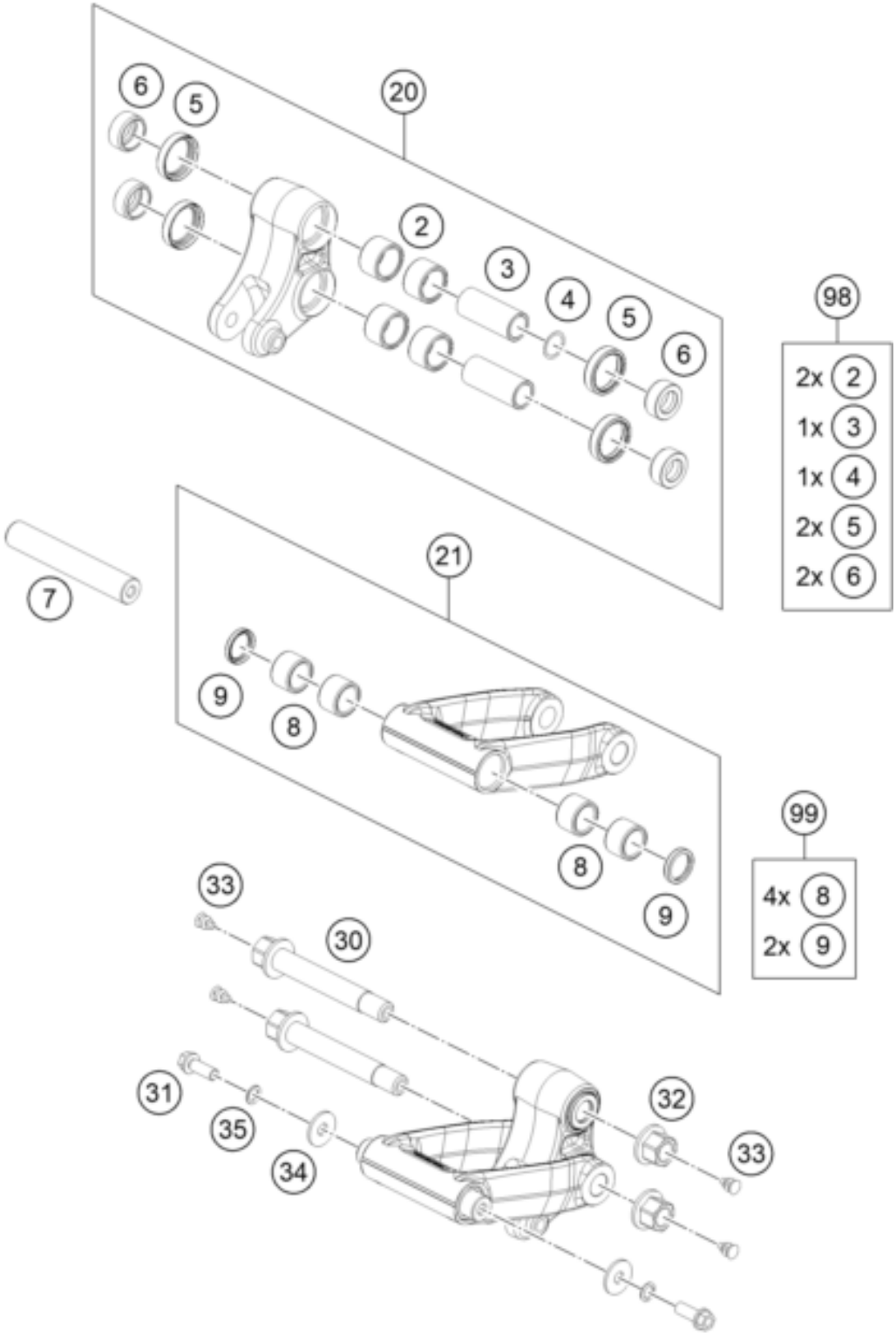

Pos	Part Number	Description	Additional Text	Quantity
2	54603097000	Needle bushing HK 2016 / 20x26		4.00
3	54603081000	Bushing sleeve 15x20x48		2.00
4	54603090010	Steel washer 15.2x19x0.1		0.00
4	54603090020	STEEL WASHER 15,2X19X0,2		0.00
4	54603090030	STEEL WASHER 15,2X19X0,3		0.00
5	0760253270	radial shaft seal 25x32x7		4.00
6	76504089000	BUCKET FOR SHAFT SEAL RING		4.00
7	76504084000	PULL ROD ANCHOR BOLT		1.00
8	56503195100	NEEDLE BEARING HK 1816		4.00

9	0760182442	SHAFT SEAL RING 18X24X4		2.00
20	7650408104401	CANTILEVER CPL. 07		1.00
21	7650408304401	PULL ROD CPL. 08		1.00
30	76504082044	Bolt cmpl. M14X1,5		2.00
31	0025080166S	HH collar screw M8x16 TX40 SL		2.00
32	54603015000	Self locking nut M14x1.5 WS19		2.00
33	54403135000	PLASTIC CAP SFL10		4.00
34	0021080003	WASHER DIN9021-A 8,4		2.00
35	36003014000	LOCK WASHER 8MM		2.00
98	76504080100	TRIANGLE LEVER REP. KIT REAR		0.00
99	76504083010	PULL ROD REP. KIT 690 END/SMC		0.00