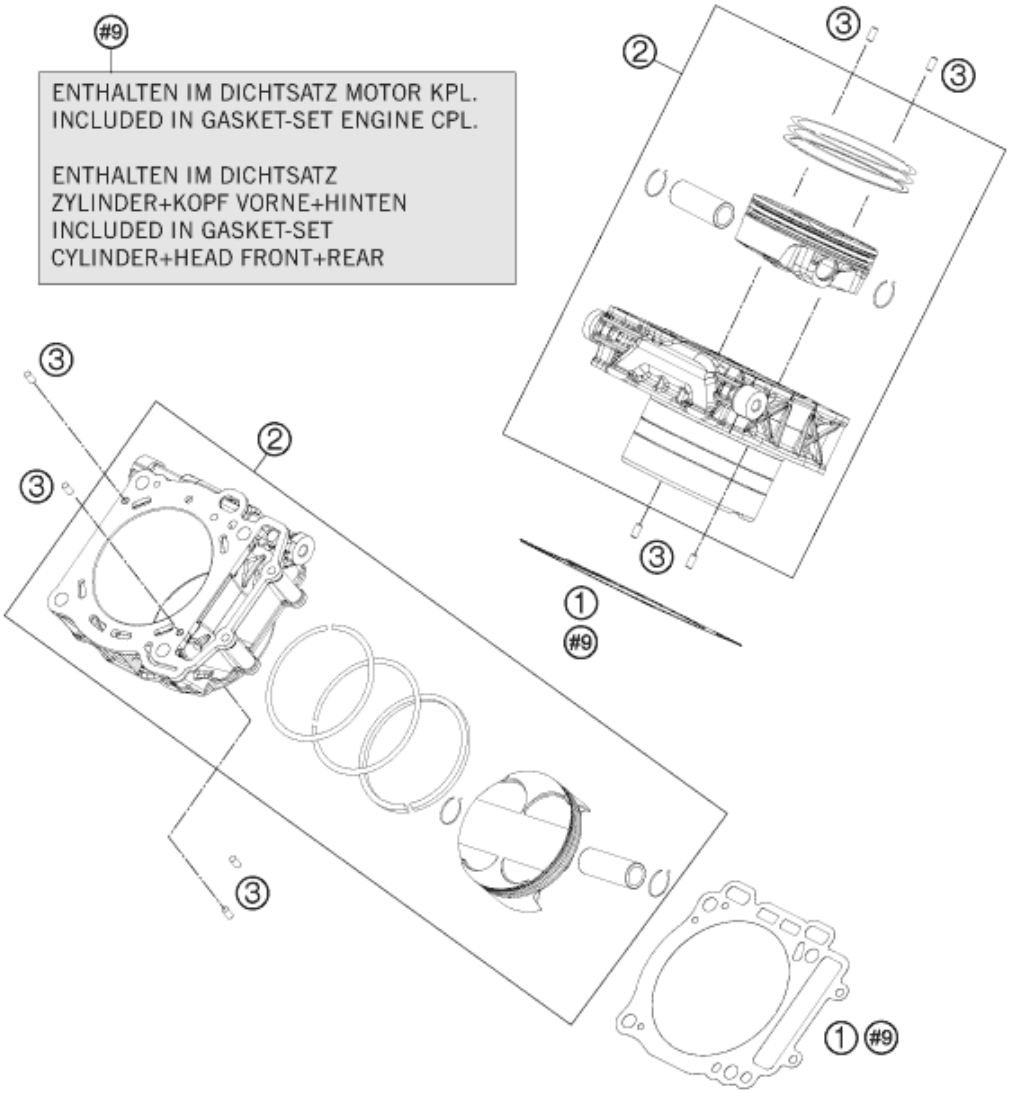


| Pos | Part Number | Description | Additional Text | Quantity |
|---|---|---|---|---|
| 1 | 61230035000 | CYLINDER BASE GASKET 08 | | 2.00 |
| 2 | 60630038000 | CYLINDER AND PISTON CPL. | | 2.00 |
| 3 | 0474050100 | GROOVED PIN DIN1474 5X10 | | 8.00 |