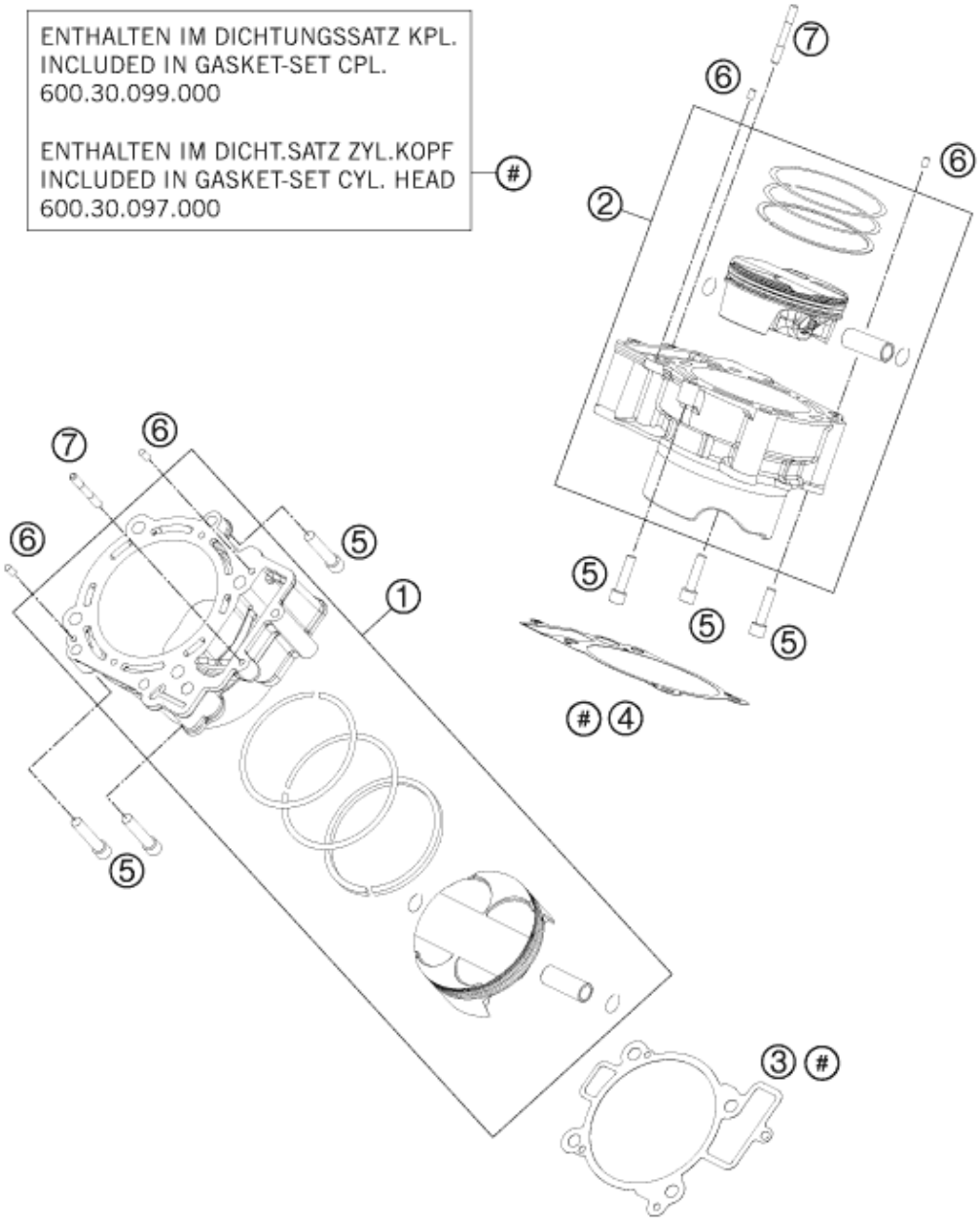

Pos	Part Number	Description	Additional Text	Quantity
1	6103003810023	CYLINDER + PISTON CPL. FRONT		1.00
2	6103013810023	CYLINDER + PISTON CPL. REAR		1.00
3	60030035000	CYLINDER-BASE GASKET FR 0,35MM		1.00
4	60030135000	CYLINDER-BASE GASKET RR 0,35MM		1.00
5	0912080353	AH SCREW DIN0912-M 8X35		6.00
6	0474050100	GROOVED PIN DIN1474 5X10		4.00
7	60030043020	STUD M6X47 03		2.00